DO NOT SCALE PRINTS THESE PLANS ARE THE PROPERTY OF THE ARCHITECT. ANY USE OR REPRODUCTION IN WHOLE OR PART WITHOUT THE WRITTEN AUTHORIZATION OF THE ARCHITECT IS PROHIBITED. ANY PERSON OR CORPORATION USING PLANS WITHOUT PROPER AUTHORIZATION WILL BE RESPONSIBLE TO COMPENSATE THE ARCHITECT.

THESE PLANS ARE NOT VALID FOR A BUILDING PERMIT UNLESS ORIGINALLY SIGNED AND SEALED BY THE ARCHITECT AND ARE FOR THE CONSTRUCTION OF ONE STRUCTURE ONLY BY THE PERSON WHOSE NAME APPEARS ON THE PLANS.

IT IS A VIOLATION OF THE LAW FOR ANY PERSON, UNLESS ACTING UNDER THE DIRECTION OF A LICENSED PROFESSIONAL, TO ALTER AN ITEM IN ANY WAY. IF AN ITEM BEARING THE SEAL OF A LICENSED PROFESSIONAL IS ALTERED, THE ALTERING LICENSED PROFESSIONAL SHALL AFFIX TO THEIR ITEM THEIR SEAL AND THE NOTATION "ALTERED BY" FOLLOWED BY THEIR SIGNATURE AND DATE OF SUCH ALTERATION, AND A SPECIFIC DESCRIPTION OF THE ALTERATION.

2020 Residential Code Of New York State

HVAC Note:
HVAC Shall Be Filed Separately

Climatic & Geographic Design Criteria Table R301.2(1)

Ground Snow Load	Wind Design				Seismic Design Category	Subject To Damage From			Winter Design Temp	Ice Shield Underlayment Required	Flood Hazards	Air Freezing Index	Mean Annual Temperature
	Speed (mph)	Topographic Effects	Special Wind Region	Wind-Borne Debris Zone		Weathering	Frost Line Depth	Termite					
30 lb/ft	115 - 120 mph	No	Yes	Zone 1	B	Severe	42"	Moderate Heavy	7° F	Yes	No	1500 or Less	52.2 F

Manual J Design Criteria

Elevation	Latitude	Winter Heating	Summer Cooling	Altitude Correction Factor	Indoor Design Temperature	Design Temperature Cooling	Heating Temperature Difference
436	41	7	87	1	68	75	61
Cooling Temperature Difference	Wind Velocity Heating	Wind Velocity Cooling	Coincident Wet Bulb	Daily Range	Winter Humidity	Summer Humidity	
12	20.4	7.5	7.5	M	30	55	

Insulation And Fenestration Requirements By Component Table R402.1.2

Climate Zone	Fenestration U-Factor	Skylight U-Factor	Glazed Fenestration SHGC	Ceiling R-Value	Wood Frame Wall R-Value	Mass Wall R-Value	Floor R-Value	Basement Wall R-Value	Slab R-Value And Depth	Crawl Space Wall R-Value
4	0.27	0.50	0.4	49	21 Int. Or 20+5 Or 13+10	15/20	30	15/19	10, 4 Ft	15/19

Insulation Note:

Prescriptive Insulation Method To Be Used No ReCheck Required
No ReCheck Required
See Table R402.1.2 Of The NYStretch Energy Code 2020

Consturction Type Note:

As Per Title 19 NYCRR Part 1265

Provide Label As Shown Below:

V = Construction Type
As Per Section 602 of BCNYS

FR = Floor And Roof Framing
As Per Designation For Structural Components That Are Of Truss/ Engineered Type Construction

Size:
6" Diameter Circle

Color:
Circle To Be 1/2" Stroke - Reflective Red Pantone #187
Inner Circle - Reflective White
Text - Reflective Red Pantone #187

Sign Location:
The Sign Or Symbol Required Shall By Affixed To The Electric Box Attached To The Exterior Of The Residential Structure.
See Section 12655 For Further Notes On Sign Location.

See Title 19 NYCRR Part 1265 For Other Specs

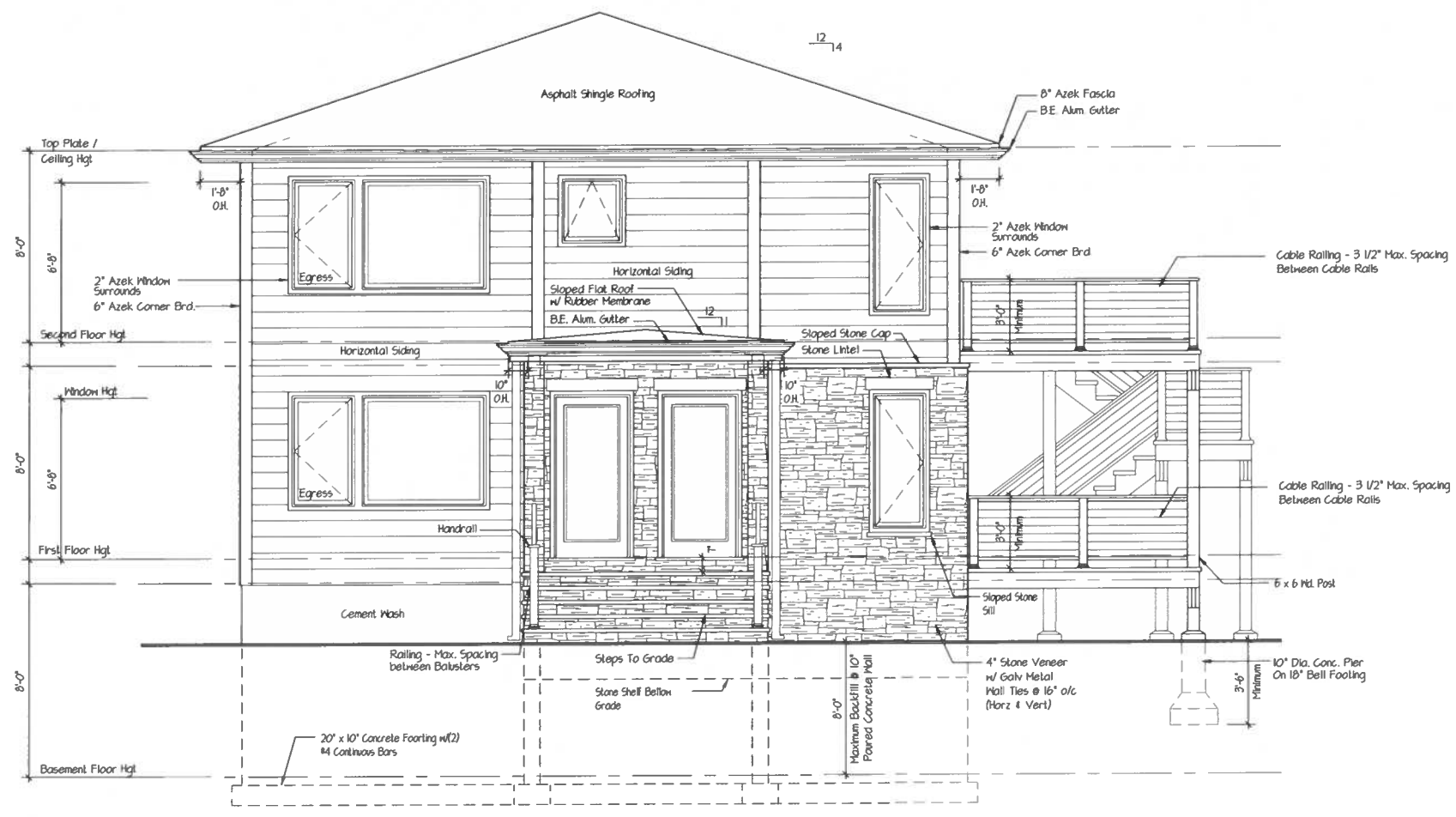

Front Elevation

Scale: 1/4" = 1'-0"

DeMasi Architects P.C.
105 SMITH AVENUE, MOUNT KISCO, NEW YORK 10549
PHONE: (914) 666-3858
EMAIL: Lou@DemasiArchitects.com WEBSITE: DemasiArchitects.com

Two Family Residence For
167 Maple Ave
Croton On Hudson, NY

Revision	Date

Date: Jan. 10, 2024

Job No: 223-080

Drawing: 1 OF 0

DO NOT SCALE PRINTS THESE PLANS ARE THE PROPERTY OF THE ARCHITECT. ANY USE OR REPRODUCTION IN WHOLE OR PART WITHOUT THE WRITTEN AUTHORIZATION OF THE ARCHITECT IS PROHIBITED. ANY PERSON OR CORPORATION USING PLANS WITHOUT PROPER AUTHORIZATION WILL BE RESPONSIBLE TO COMPENSATE THE ARCHITECT.

THESE PLANS ARE NOT VALID FOR A BUILDING PERMIT UNLESS ORIGINALLY SIGNED AND SEALED BY THE ARCHITECT AND ARE FOR THE CONSTRUCTION OF ONE SITE/USE ONLY BY THE PERSON WHOSE NAME APPEARS ON THE PLANS.

IT IS A VIOLATION OF THE LAW FOR ANY PERSON UNLESS ACTING UNDER THE DIRECTION OF A LICENSED PROFESSIONAL TO ALTER AN ITEM IN ANY WAY. IF AN ITEM BEARING THE SEAL OF A LICENSED PROFESSIONAL IS ALTERED, THE ALTERING LICENSED PROFESSIONAL SHALL AFFIX TO THEIR ITEM THEIR SEAL AND THE NOTATION "ALTERED BY" FOLLOWED BY THEIR SIGNATURE AND DATE OF SUCH ALTERATION, AND A SPECIFIC DESCRIPTION OF THE ALTERATION

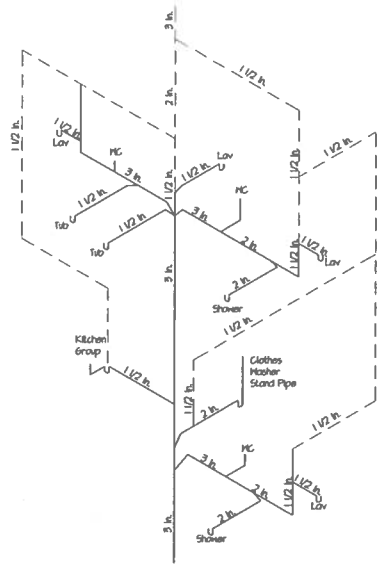

Riser diagram taken from "2020 Residential Code Of New York State" Figure N5. Refer to diagram for all other information

Note:
Plumbing riser diagram shown is generic, and should be used only for informational purposes. Plumbing contractor to install plumbing system as per state & local building codes.

Typical Plumbing Riser Diagram

Scale: None

Notes:
Provide Lighting At Top & Bottom Of Stair As Per Code

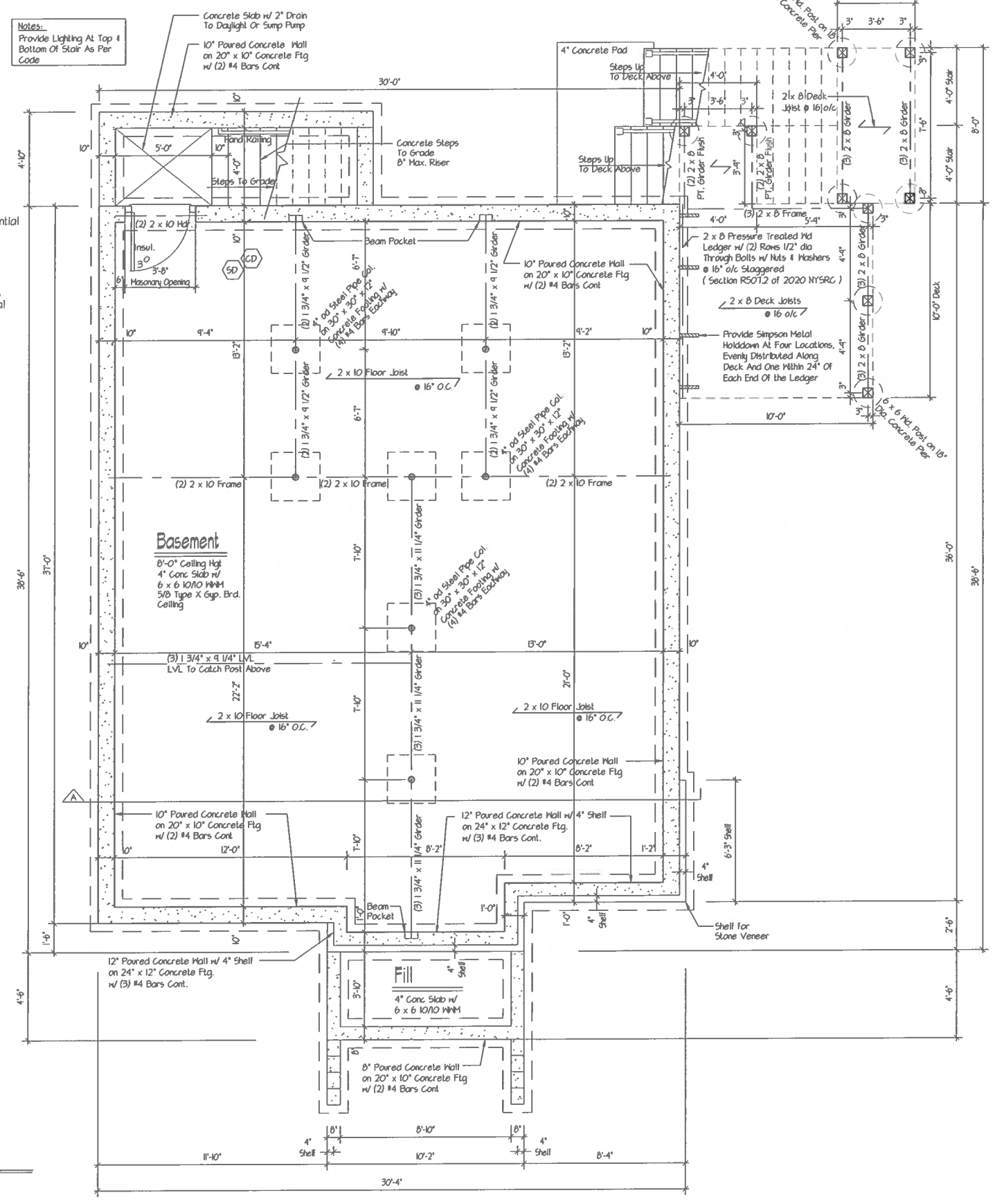

Notes:

All Footings To Bear 12" Below Solid Undisturbed Earth

All Framing Members To Be # 2 Douglas Fir- Larch Or Better

Double Frame Under All Partitions Parallel To Framing

Double All Box Joist At Cellar Type Windows

If Tile Floor Is To Be MUD Job Consult Architect For Additional Framing Required

Legend:

- 2 x Wood Post (Match Beam Width or As Noted
- SD — Smoke Detector w/ Battery Back-Up
- CD — Carbon Monoxide Det w/ Battery Back-Up

Wood Header Schedule

Span	Header Size
Up To 3'-0"	(2) 2 x 8 Hdr
Up To 4'-0"	(2) 2 x 10 Hdr
Up To 6'-0"	(3) 2 x 10 Hdr

Note:
Unless Otherwise Noted On Plans

Foundation Plan

Scale: 1/4" = 1'-0"

DeMasi Architects P.C.
105 SMITH AVENUE, MOUNT KISCO, NEW YORK 10549
PHONE: (914) 666-3058
EMAIL: Louis@DemasiArchitects.com WEBSITE: DemasiArchitects.com

REGISTERED ARCHITECT LOUIS DEMASI STATE OF NEW YORK

Two Family Residence For
167 Maple Ave
Croton On Hudson, NY

Revision	Date

Date: Jan. 10, 2024

Job No: 223-080

Drawing: 2 OF 10

DO NOT SCALE PRINTS THESE PLANS ARE THE PROPERTY OF THE ARCHITECT. ANY USE OR REPRODUCTION IN WHOLE OR PART WITHOUT THE WRITTEN AUTHORIZATION OF THE ARCHITECT IS PROHIBITED. ANY PERSON OR CORPORATION USING PLANS WITHOUT PROPER AUTHORIZATION WILL BE RESPONSIBLE TO COMPENSATE THE ARCHITECT

THESE PLANS ARE NOT VALID FOR A BUILDING PERMIT UNLESS ORIGINALLY SIGNED AND SEALED BY THE ARCHITECT AND ARE FOR THE CONSTRUCTION OF ONE STRUCTURE ONLY BY THE PERSON WHOSE NAME APPEARS ON THE PLANS.

IT IS A VIOLATION OF THE LAW FOR ANY PERSON, UNLESS ACTING UNDER THE DIRECTION OF A LICENSED PROFESSIONAL, TO ALTER AN ITEM IN ANY WAY. IF AN ITEM BEARING THE SEAL OF A LICENSED PROFESSIONAL IS ALTERED, THE ALTERING LICENSED PROFESSIONAL SHALL AFFIX TO THEIR ITEM THEIR SEAL AND THE NOTATION "ALTERED BY" FOLLOWED BY THEIR SIGNATURE AND DATE OF SUCH ALTERATION, AND A SPECIFIC DESCRIPTION OF THE ALTERATION

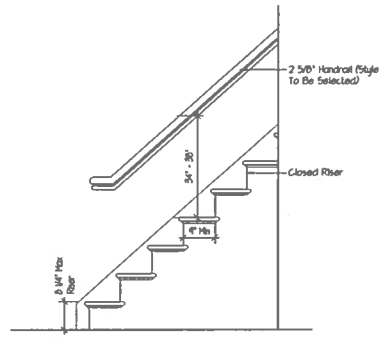

Elevation

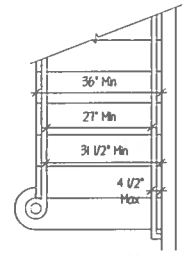

Stair / Handrail Minimum Clearances

Plan

Stair Clearance Detail

Scale: None

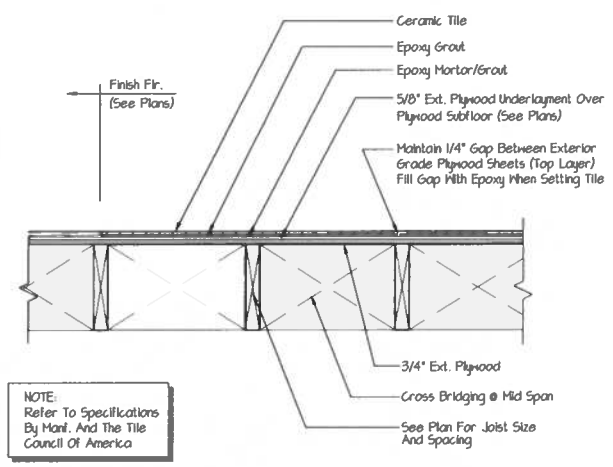

NOTE:
Refer To Specifications By Manf. And The Tile Council Of America

Tile Floor Detail (Thin Set)

Scale: 1" = 1'-0"

Window Note:

1. All Glazing To Be Low "E" Insulated Glass w/ Minimum U-Factor Of 0.27 And SHGC Of .04
2. All Windows Within 18" Of Floor To Have Tempered Glass (Double Hung's-Bottom Sash Only, All Others Full Unit).
3. All Glazing In Doors & Windows Enclosing Hot Tubs, Whirlpool Tubs, Saunas, Steam Rooms, Bathtubs and Showers Within 60" Of Window or Door Unit Shall Have Tempered Glass.
4. All Egress Windows To Have A Minimum Clear Opening Area Of 5.7 Sf Total w/ 24" min Clear Opening Height & 20" min Clear Width. Refer To Manufactures Specifications For All Other Information.
5. All Windows or Doors Marked w/ "TEMP" To Have Full Unit Tempered.
6. All Windows Sills Within 24" Above The Finished Floor & Greater Than 72" Above Finished Grade Or Other Surface. Requires Fall Protection. See Section R312.2 For More Info.

Notes:

All Framing Members To Be # 2 Douglas Fir- Larch Or Better

Double Frame Under All Partitions Parallel To Framing

If Tile Floor Is To Be MUD Job Consult Architect For Additional Framing Required

Legend:

- 2 x Wood Post (Match Beam Width or As Noted
- SD Smoke Detector w/ Battery Back-Up
- CD Carbon Monoxide Det w/ Battery Back-Up

Wood Header Schedule

Span	Header Size
Up To 3'-0"	(2) 2 x 8 Hdr
Up To 4'-0"	(2) 2 x 10 Hdr
Up To 6'-0"	(3) 2 x 10 Hdr

Note:
Unless Otherwise Noted On Plans

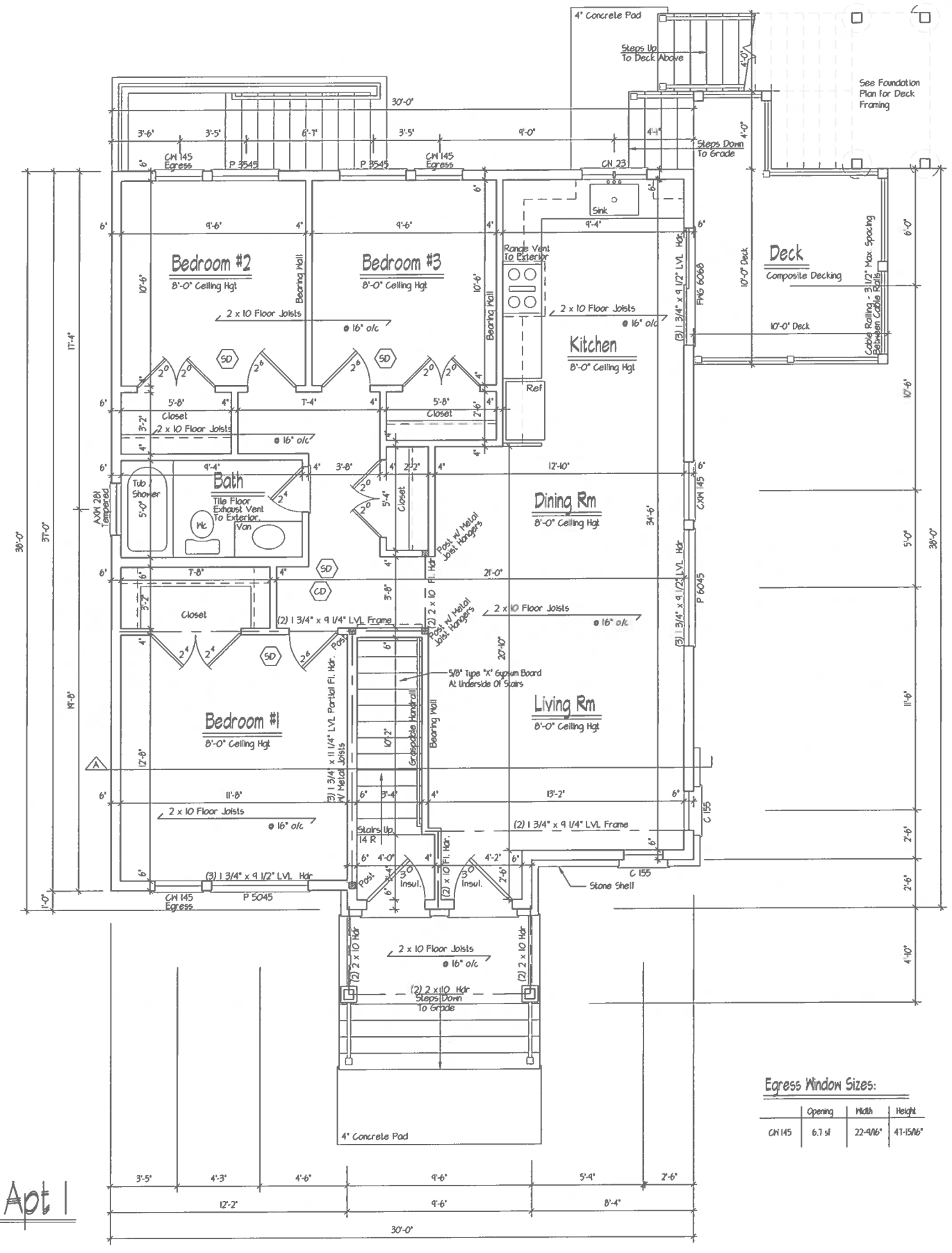

First Floor Plan - Apt 1

Scale: 1/4" = 1'-0"

Egress Window Sizes:

	Opening	Width	Height
CH 145	6.7 sf	22-4/16"	47-15/16"

DeMasi Architects P.C.
105 SMITH AVENUE, MOUNT KISCO, NEW YORK 10549
PHONE: (914) 666-3058
EMAIL: Louis@DemasiArchitects.com WEBSITE: DemasiArchitects.com

Two Family Residence For
167 Maple Ave
Croton On Hudson, NY

Revision	Date

Date: Jan. 10, 2024

Job No: 223-080

Drawing: 3 OF 10

DO NOT SCALE PRINTS THESE PLANS ARE THE PROPERTY OF THE ARCHITECT. ANY USE OR REPRODUCTION IN WHOLE OR PART WITHOUT THE WRITTEN AUTHORIZATION OF THE ARCHITECT IS PROHIBITED. ANY PERSON OR CORPORATION USING PLANS WITHOUT PROPER AUTHORIZATION WILL BE RESPONSIBLE TO COMPENSATE THE ARCHITECT

THESE PLANS ARE NOT VALID FOR A BUILDING PERMIT UNLESS ORIGINALLY SIGNED AND SEALED BY THE ARCHITECT AND ARE FOR THE CONSTRUCTION OF ONE STRUCTURE ONLY BY THE PERSON WHOSE NAME APPEARS ON THE PLANS.

IT IS A VIOLATION OF THE LAW FOR ANY PERSON UNLESS ACTING UNDER THE DIRECTION OF A LICENSED PROFESSIONAL TO ALTER AN ITEM IN ANY WAY. IF AN ITEM BEARING THE SEAL OF A LICENSED PROFESSIONAL IS ALTERED, THE ALTERING LICENSED PROFESSIONAL SHALL AFFIX TO THEIR ITEM THEIR SEAL AND THE NOTATION "ALTERED BY" FOLLOWED BY THEIR SIGNATURE AND DATE OF SUCH ALTERATION, AND A SPECIFIC DESCRIPTION OF THE ALTERATION

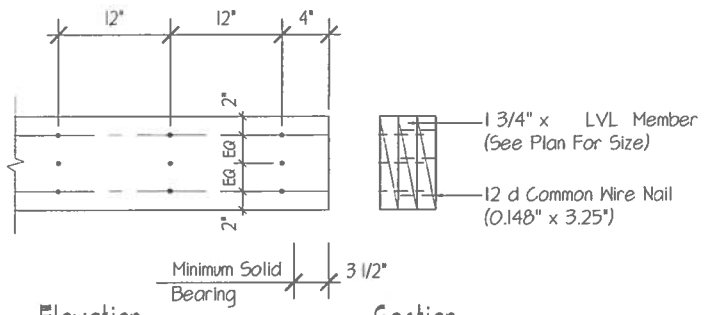

Elevation

Note:

LVL = Laminated Veneer Lumber
By Trus-Joist Weyerhaeuser (1.9 E)
Minimum or Equal

Section

Note:

See Plans For Size & Location
Of All LVL Members

LVL Beam Detail (Nailed)

Scale: 1" = 1'-0"

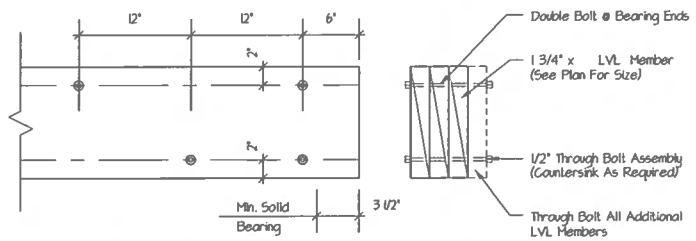

Elevation

Note:

LVL = Laminated Veneer Lumber
By Trus-Joist Weyerhaeuser (1.9 E)
Minimum or Equal

Section

Note:

See Plans For Size & Location
Of All LVL Members

Note:

Bolting As Required, Refer
To Manufactured Specifications
For All Information & Specifics

LVL Beam Detail (Bolted)

Scale: None

Window Note:

1. All Glazing To Be Low "E" Insulated Glass w/ Minimum U-Factor Of 0.27 And SHGC Of .04
2. All Windows Within 18" Of Floor To Have Tempered Glass (Double Hung's-Bottom Sash Only, All Others Full Unit).
3. All Glazing In Doors & Windows Enclosing Hot Tubs, Whirlpool Tubs, Saunas, Steam Rooms, Bathtubs and Showers Within 60" Of Window or Door Unit Shall Have Tempered Glass.
4. All Egress Windows To Have A Minimum Clear Opening Area Of 5.7 Sf Total w/ 24" min Clear Opening Height & 20" min Clear Width. Refer To Manufactures Specifications For All Other Information.
5. All Windows or Doors Marked w/ "TEMP" To Have Full Unit Tempered.
6. All Windows Sills Within 24" Above The Finished Floor & Greater Than 72" Above Finished Grade Or Other Surface. Requires Fall Protection. See Section R312.2 For More Info.

Notes:

All Framing Members To Be # 2 Douglas Fir- Larch Or Better

Double Frame Under All Partitions Parallel To Framing

If Tile Floor Is To Be MUD Job Consult Architect For Additional Framing Required

Legend:

- 2 x Wood Post (Match Beam Width or As Noted
- SD — Smoke Detector w/ Battery Back-Up
- CD — Carbon Monoxide Det w/ Battery Back-Up

Wood Header Schedule

Span	Header Size
Up To 3'-0"	(2) 2 x 8 Hdr
Up To 4'-0"	(2) 2 x 10 Hdr
Up To 6'-0"	(3) 2 x 10 Hdr

Note:
Unless Otherwise Noted On Plans

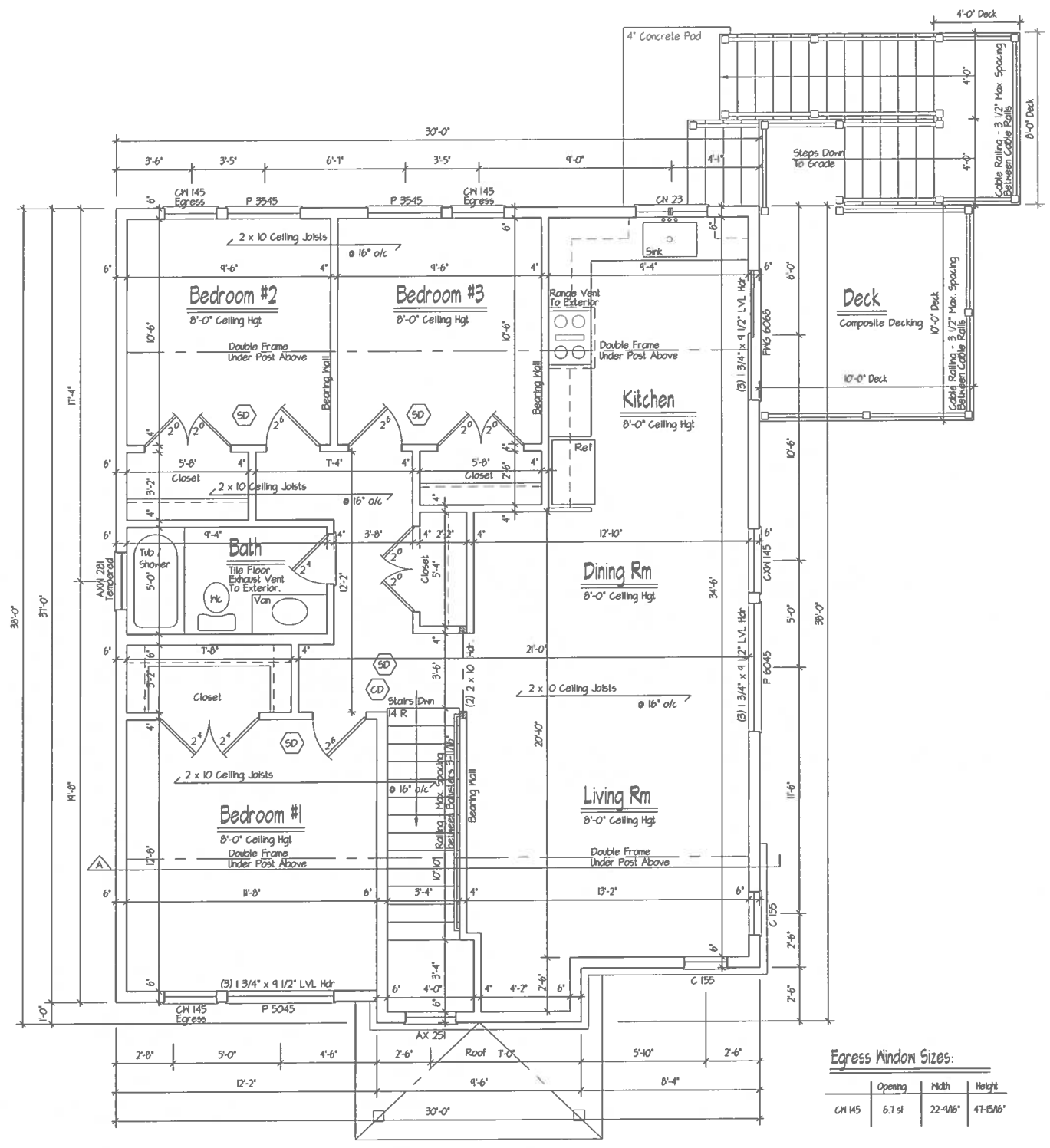

Second Floor Plan - Apt 2

Scale: 1/4" = 1'-0"

Egress Window Sizes:

	Opening	Width	Height
GN 145	6.7 sf	22-4/16"	47-15/16"

DeMasi Architects P.C.
105 SMITH AVENUE, MOUNT KISCO, NEW YORK 10549
PHONE: (914) 666-3956
EMAIL: Love@DemasiArchitects.com WEBSITE: DemasiArchitects.com

REGISTERED ARCHITECT
JOHN DEMASI
NEW YORK

Two Family Residence For
167 Maple Ave
Croton On Hudson, NY

Revision	Date

Date: Jan. 10, 2024

Job No: 223-080

Drawing: 4 OF 10

DO NOT SCALE PRINTS THESE PLANS ARE THE PROPERTY OF THE ARCHITECT. ANY USE OR REPRODUCTION IN WHOLE OR PART WITHOUT THE WRITTEN AUTHORIZATION OF THE ARCHITECT IS PROHIBITED. ANY PERSON OR CORPORATION USING PLANS WITHOUT PROPER AUTHORIZATION WILL BE RESPONSIBLE TO COMPENSATE THE ARCHITECT

THESE PLANS ARE NOT VALID FOR A BUILDING PERMIT UNLESS ORIGINALLY SIGNED AND SEALED BY THE ARCHITECT AND ARE FOR THE CONSTRUCTION OF ONE STRUCTURE ONLY BY THE PERSON WHOSE NAME APPEARS ON THE PLANS.

IT IS A VIOLATION OF THE LAW FOR ANY PERSON UNLESS ACTING UNDER THE DIRECTION OF A LICENSED PROFESSIONAL TO ALTER AN ITEM IN ANY WAY. IF AN ITEM BEARING THE SEAL OF A LICENSED PROFESSIONAL IS ALTERED, THE ALTERING LICENSED PROFESSIONAL SHALL AFFIX TO THEIR ITEM THEIR SEAL AND THE NOTATION "ALTERED BY" FOLLOWED BY THEIR SIGNATURE AND DATE OF SUCH ALTERATION, AND A SPECIFIC DESCRIPTION OF THE ALTERATION

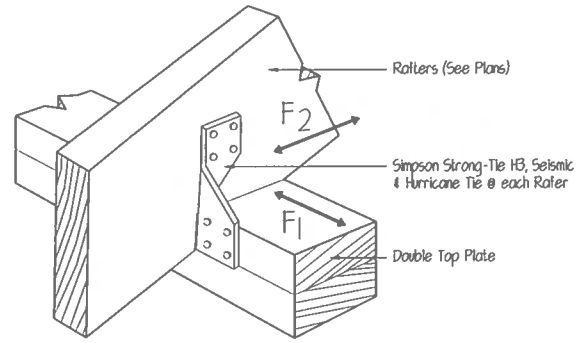

Rafter Tie Down Detail

Scale: None

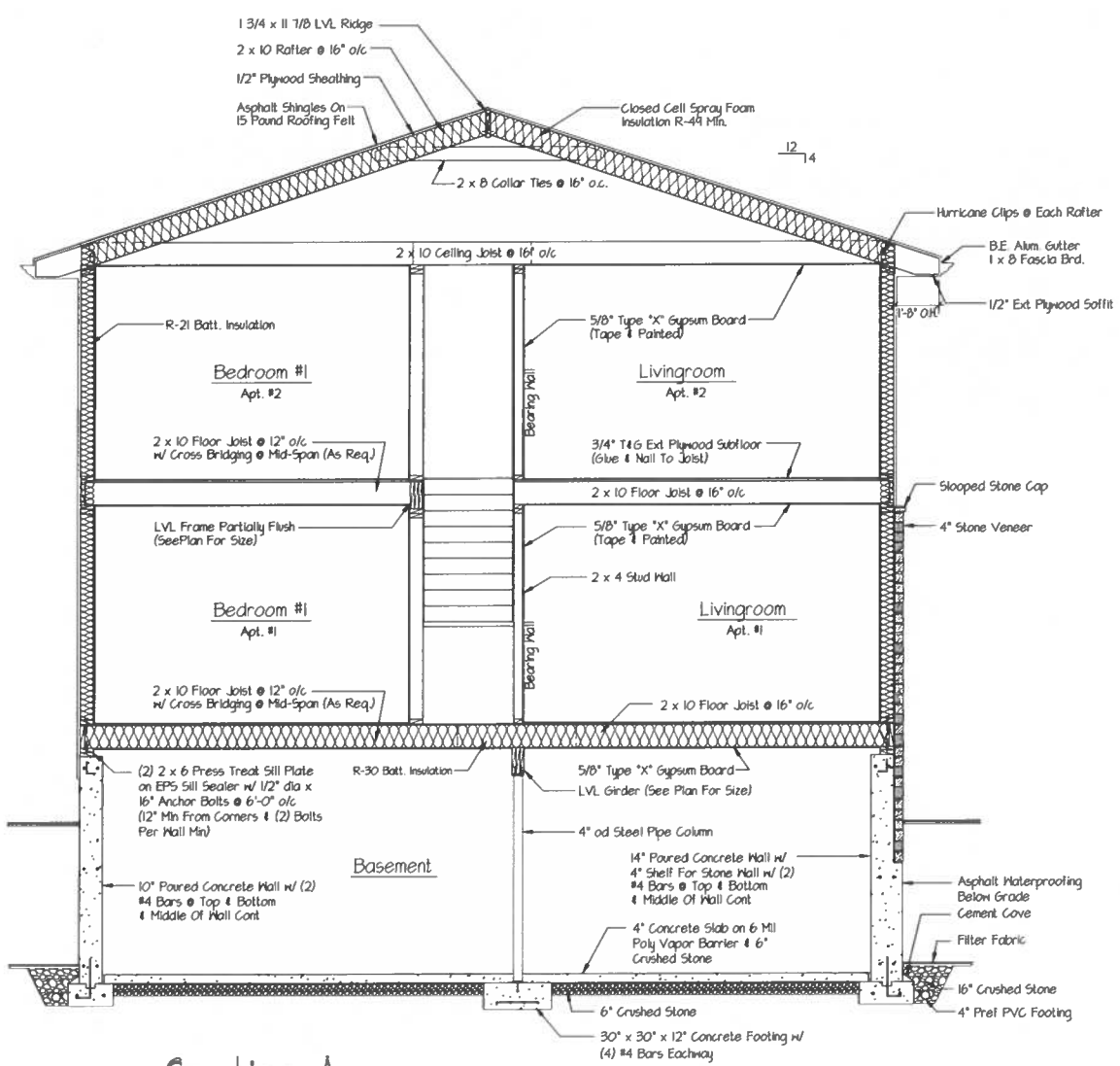

Section A

Scale: 1/4" = 1'-0"

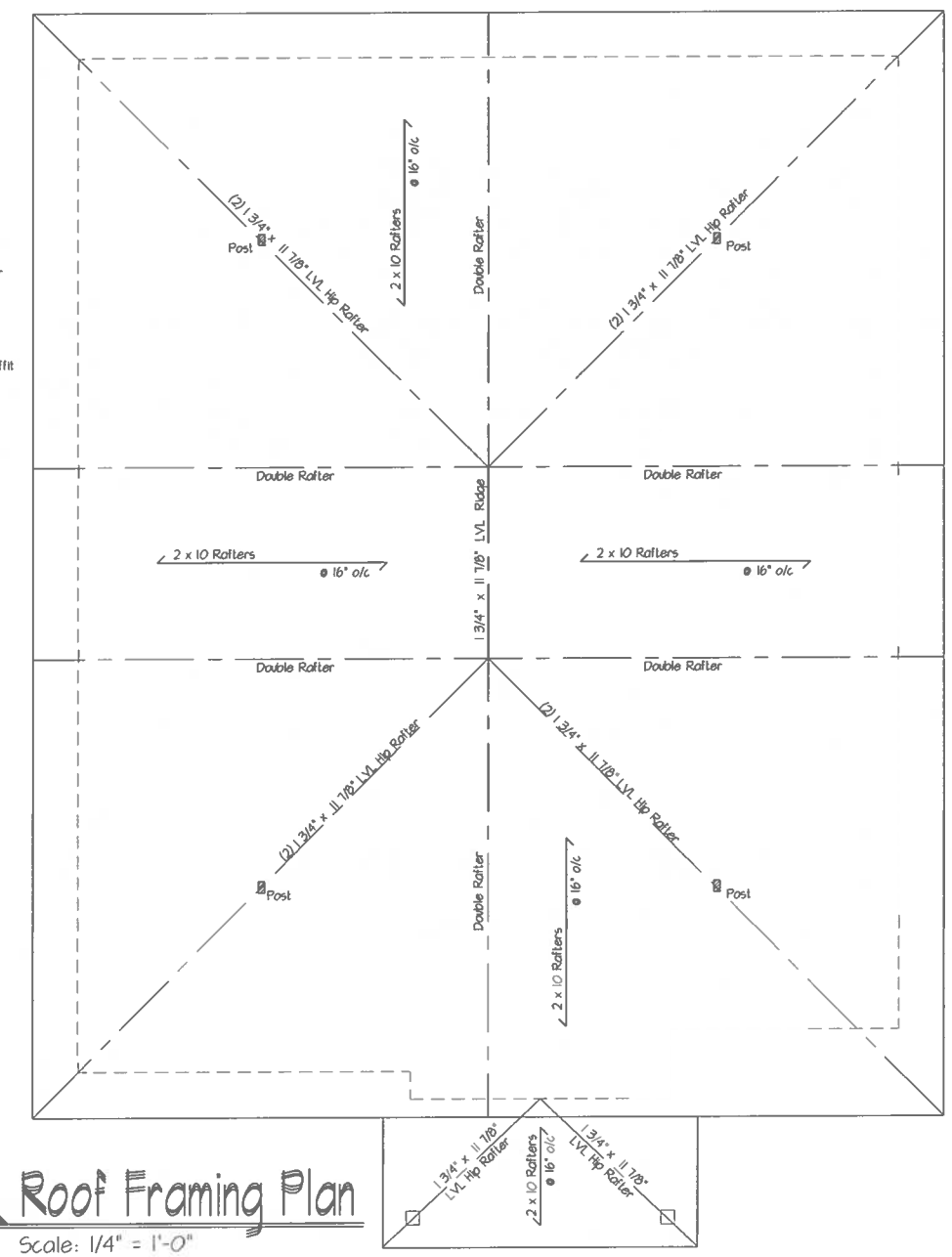

Roof Framing Plan

Scale: 1/4" = 1'-0"

DeMasi Architects P.C.
105 SMITH AVENUE, MOUNT KISCO, NEW YORK 10549
PHONE: (914) 666-3858
EMAIL: Louie@DemasiArchitects.com WEBSITE: DemasiArchitects.com

Two Family Residence For
167 Maple Ave
Croton On Hudson, NY

Revision	Date

Date: Jan. 10, 2024

Job No: 223-080

Drawing: 5 OF 10

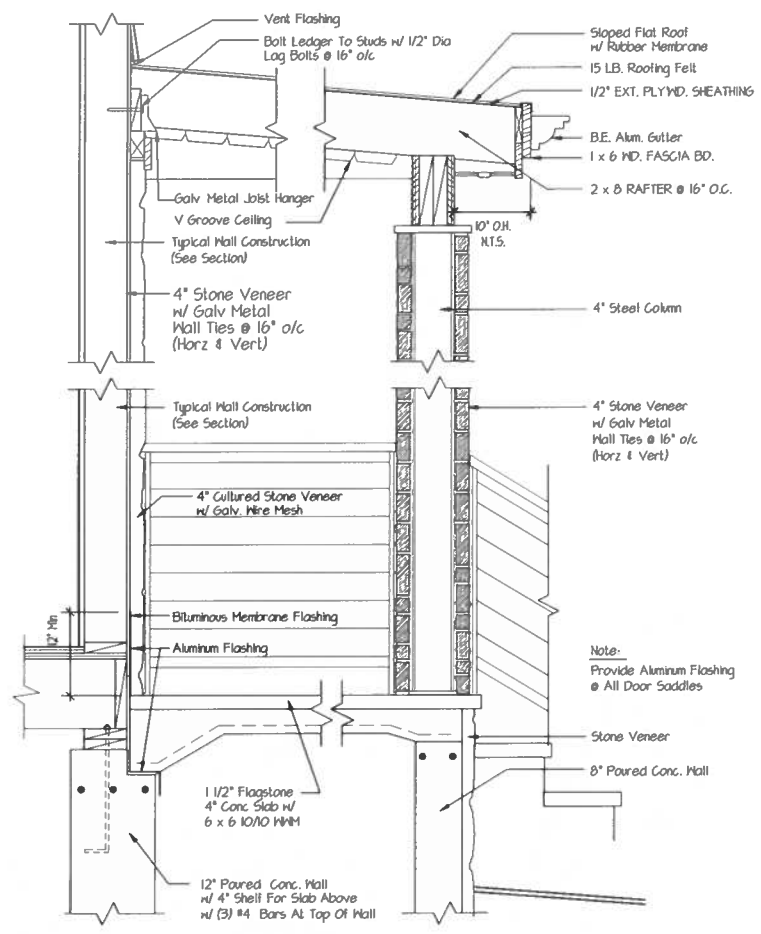

Covered Porch Detail

Scale: 3/4" = 1'-0"

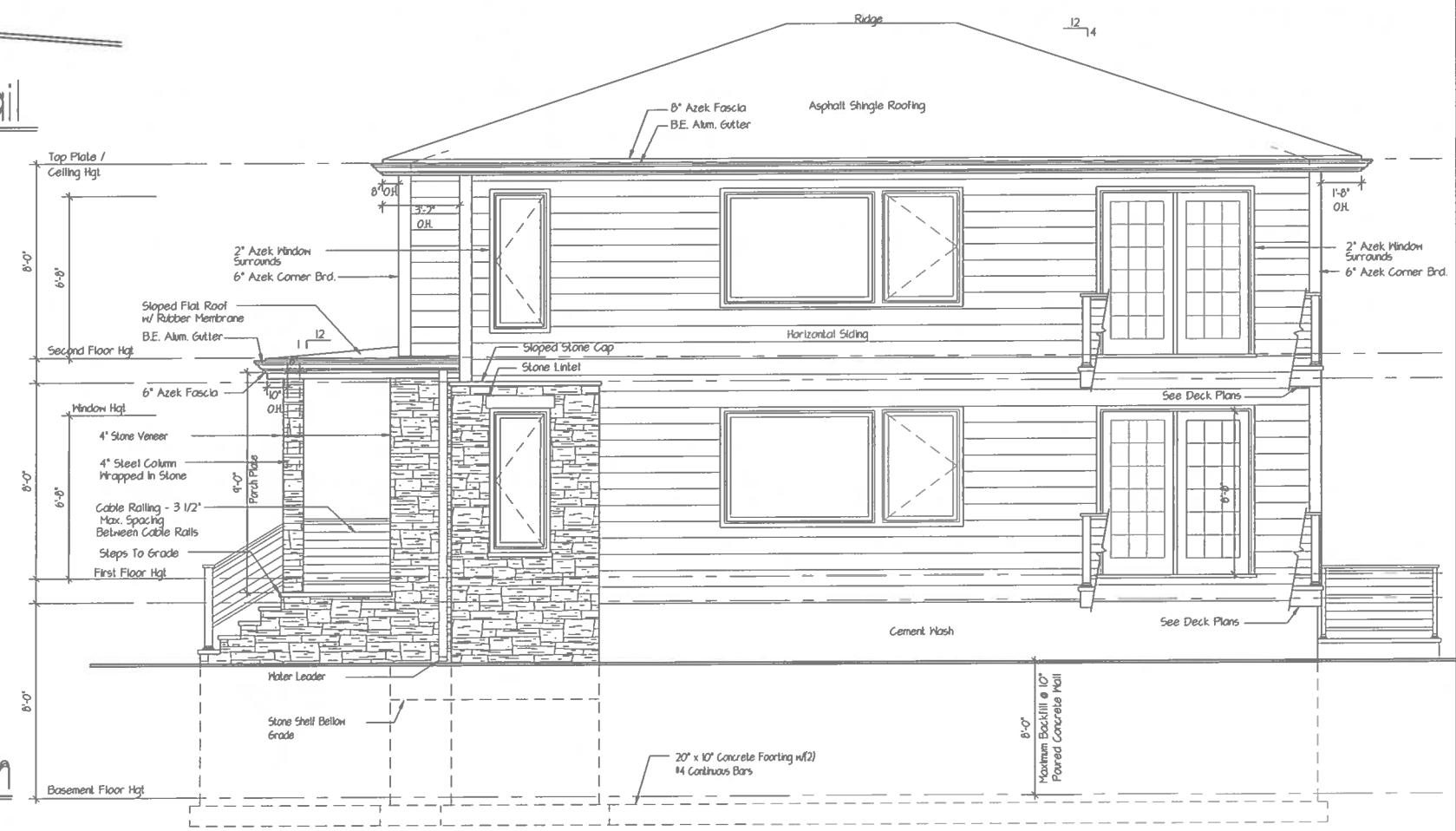

Right Side Elevation

Scale: 1/4" = 1'-0"

DO NOT SCALE PRINTS THESE PLANS ARE THE PROPERTY OF THE ARCHITECT. ANY USE OR REPRODUCTION IN WHOLE OR PART WITHOUT THE WRITTEN AUTHORIZATION OF THE ARCHITECT IS PROHIBITED. ANY PERSON OR CORPORATION USING PLANS WITHOUT PROPER AUTHORIZATION WILL BE RESPONSIBLE TO COMPENSATE THE ARCHITECT.

THESE PLANS ARE NOT VALID FOR A BUILDING PERMIT UNLESS ORIGINALLY SIGNED AND SEALED BY THE ARCHITECT AND ARE FOR THE CONSTRUCTION OF ONE STRUCTURE ONLY BY THE PERSON WHOSE NAME APPEARS ON THE PLANS.

IT IS A VIOLATION OF THE LAW FOR ANY PERSON, UNLESS ACTING UNDER THE DIRECTION OF A LICENSED PROFESSIONAL, TO ALTER AN ITEM IN ANY WAY. IF AN ITEM BEARING THE SEAL OF A LICENSED PROFESSIONAL IS ALTERED, THE ALTERING LICENSED PROFESSIONAL SHALL AFFIX TO THEIR ITEM THEIR SEAL AND THE NOTATION "ALTERED BY" FOLLOWED BY THEIR SIGNATURE AND DATE OF SUCH ALTERATION, AND A SPECIFIC DESCRIPTION OF THE ALTERATION.

DeMasi Architects P.C.
105 SMITH AVENUE, MOUNT KISCO, NEW YORK 10549
PHONE: (914) 666-3858
EMAIL: Love@DemasiArchitects.com WEBSITE: DemasiArchitects.com

REGISTERED ARCHITECT DEMASI NEW YORK

Two Family Residence For
167 Maple Ave
Croton On Hudson, NY

Revision	Date

Date: Jan. 10, 2024

Job No: 223-080

Drawing: 6 OF 10

DO NOT SCALE PRINTS THESE PLANS ARE THE PROPERTY OF THE ARCHITECT. ANY USE OR REPRODUCTION IN WHOLE OR PART WITHOUT THE WRITTEN AUTHORIZATION OF THE ARCHITECT IS PROHIBITED. ANY PERSON OR CORPORATION USING PLANS WITHOUT PROPER AUTHORIZATION WILL BE RESPONSIBLE TO COMPENSATE THE ARCHITECT.

THESE PLANS ARE NOT VALID FOR A BUILDING PERMIT UNLESS ORIGINALLY SIGNED AND SEALED BY THE ARCHITECT AND ARE FOR THE CONSTRUCTION OF ONE STRUCTURE ONLY BY THE PERSON WHOSE NAME APPEARS ON THE PLANS.

IT IS A VIOLATION OF THE LAW FOR ANY PERSON, UNLESS ACTING UNDER THE DIRECTION OF A LICENSED PROFESSIONAL, TO ALTER AN ITEM IN ANY WAY. IF AN ITEM BEARING THE SEAL OF A LICENSED PROFESSIONAL IS ALTERED, THE ALTERING LICENSED PROFESSIONAL SHALL AFFIX TO THEIR ITEM THEIR SEAL AND THE NOTATION "ALTERED BY" FOLLOWED BY THEIR SIGNATURE AND DATE OF SUCH ALTERATION, AND A SPECIFIC DESCRIPTION OF THE ALTERATION.

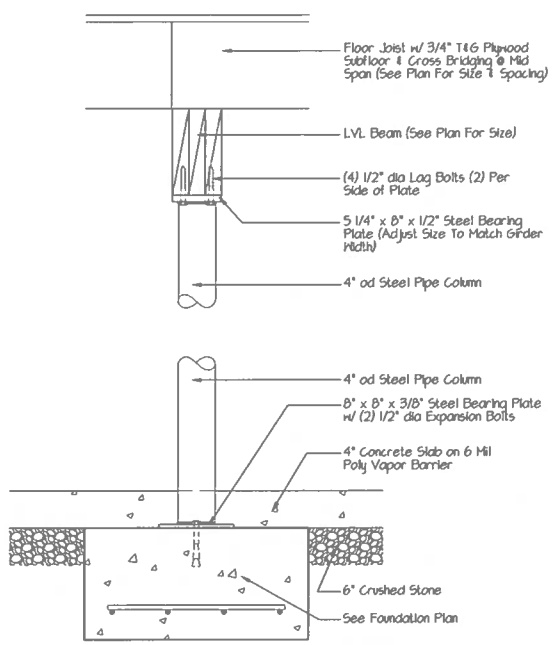

LVL Girder Detail

Scale: 1" = 1'-0"

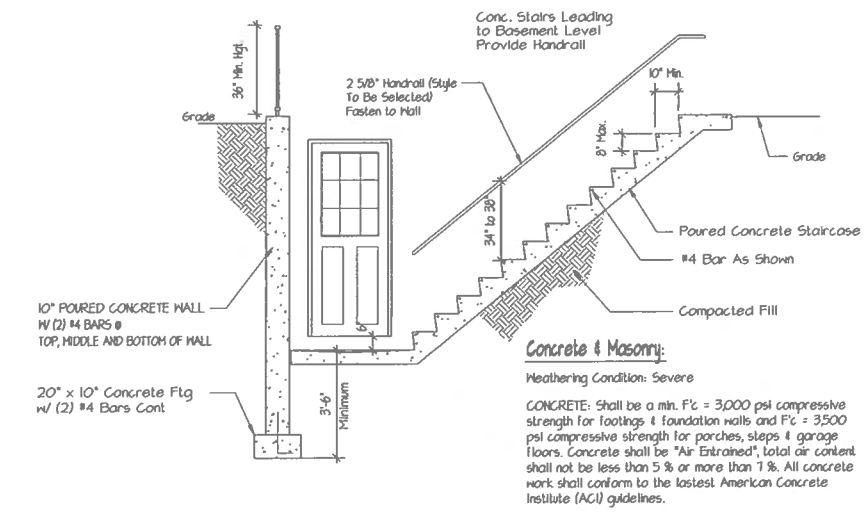

Concrete & Masonry:

Weathering Condition: Severe

CONCRETE: Shall be a min. F'c = 3,000 psi compressive strength for footings & foundation walls and Fc = 3,500 psi compressive strength for porches, steps & garage floors. Concrete shall be "Air Entrained", total air content shall not be less than 5 % or more than 7 %. All concrete work shall conform to the lastest American Concrete Institute (ACI) guidelines.

Exterior Stair Detail

Scale: 1/4" = 1'-0"

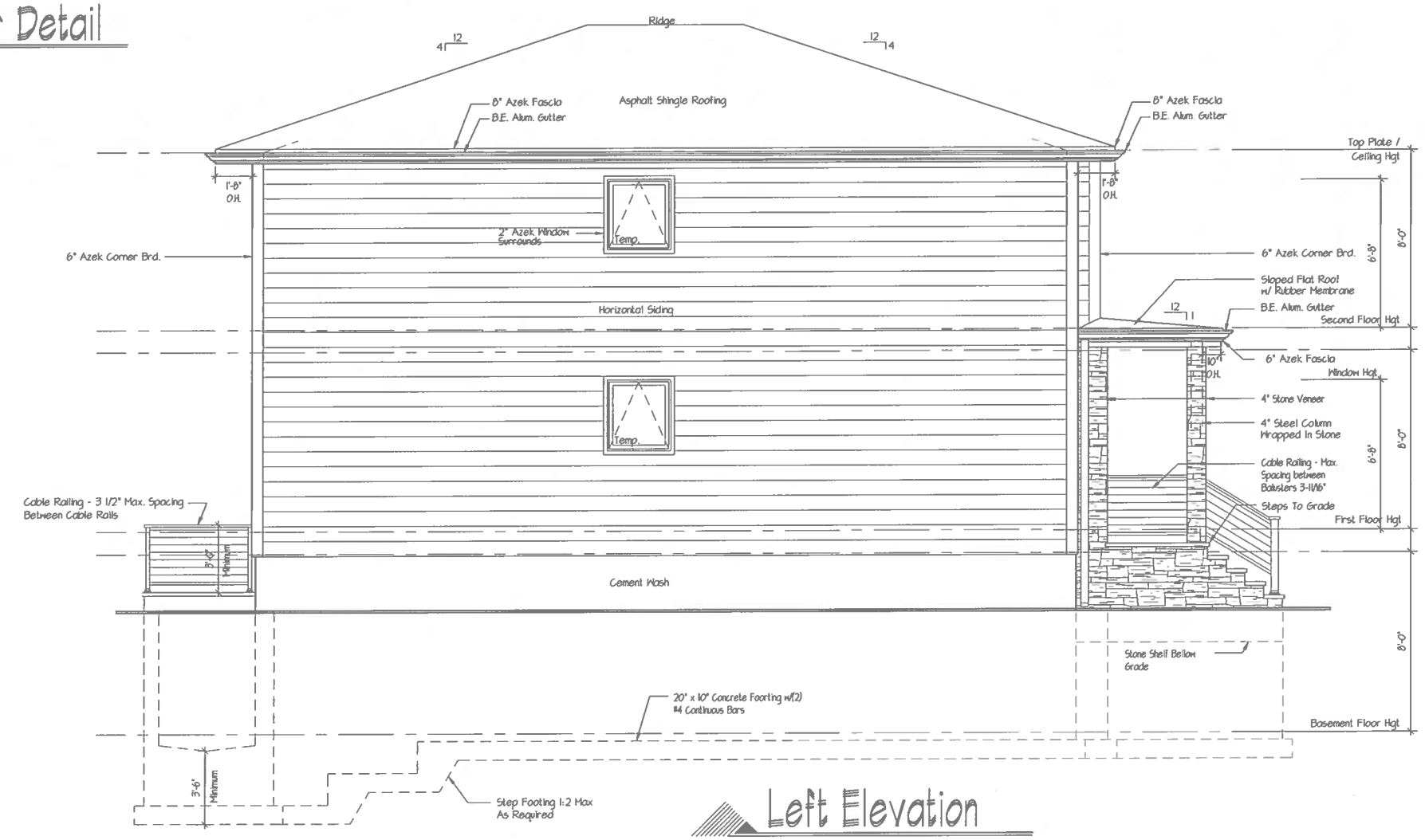

Left Elevation

Scale: 1/4" = 1'-0"

DeMasi Architects P.C.
105 SMITH AVENUE, MOUNT KISCO, NEW YORK 10549
PHONE: (914) 666-3058
EMAIL: Louis@DemasiArchitects.com WEBSITE: DemasiArchitects.com

REGISTERED ARCHITECT LOUIS DEMASI STATE OF NEW YORK

Two Family Residence For
167 Maple Ave
Croton On Hudson, NY

Revision	Date

Date: Jan. 10, 2024

Job No: 223-080

Drawing: 7 OF 10

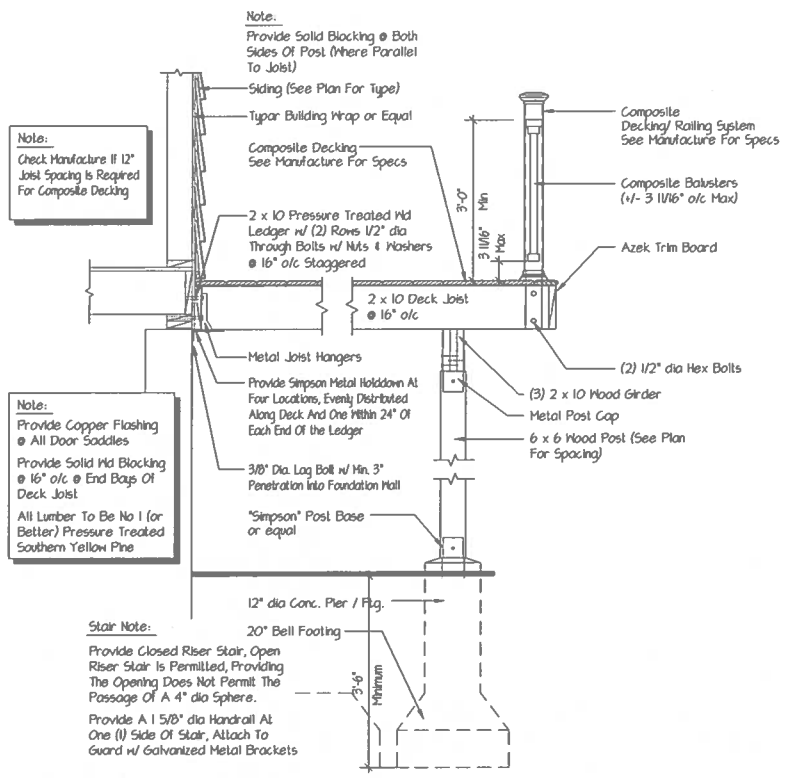

Wood Deck Detail

Scale: 1/2" = 1'-0"

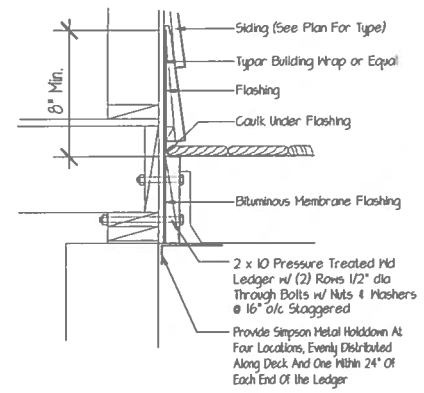

Flashing Detail

Scale: 1"=1'-0"

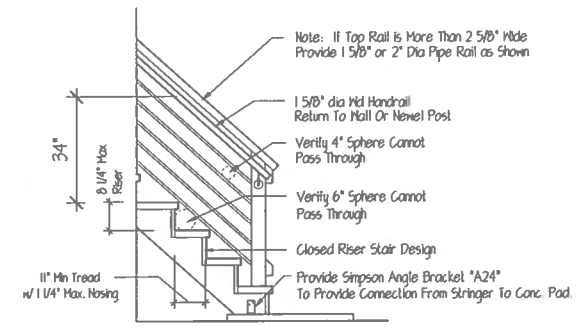

Deck Handrail & Stair Detail

No Scale

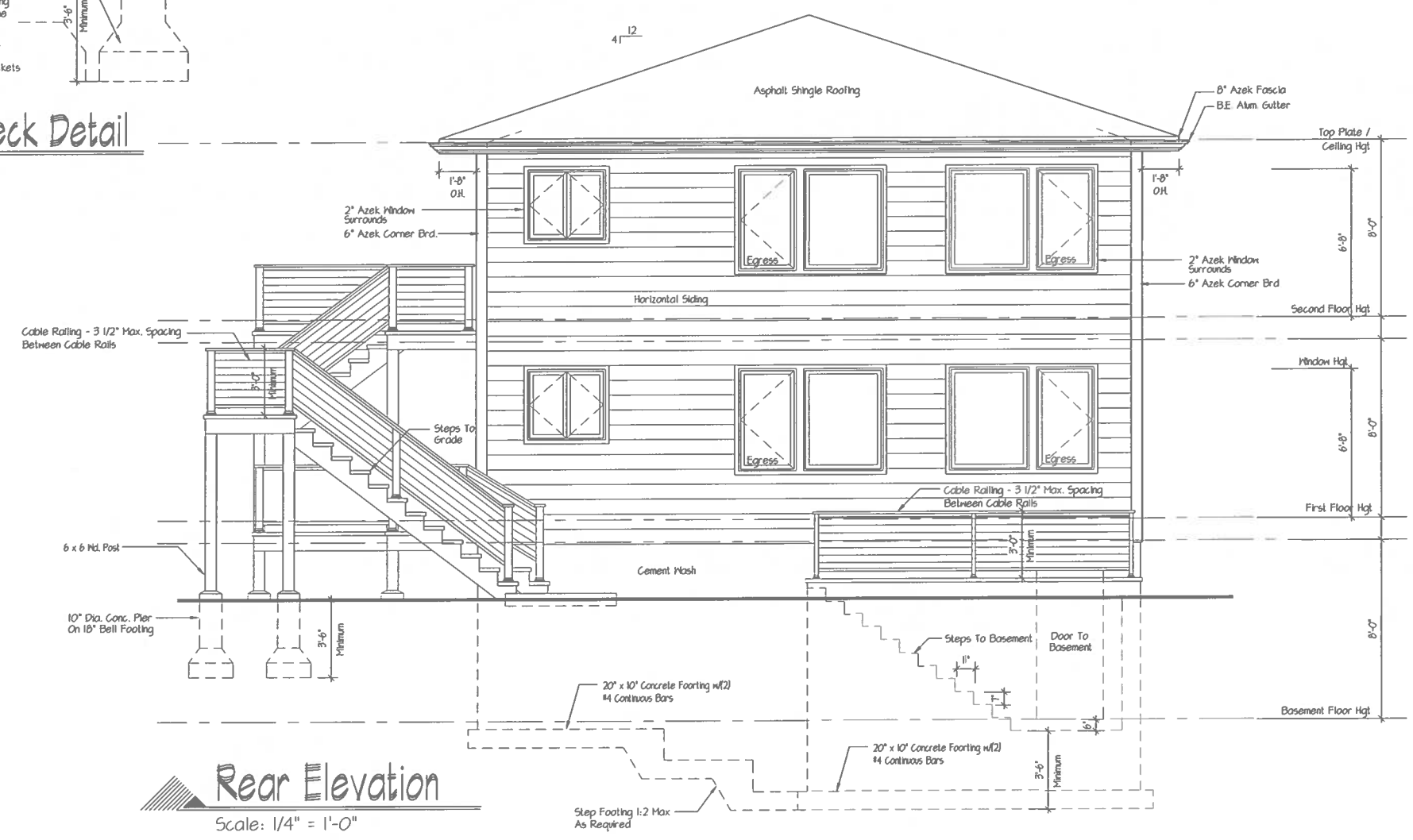

Rear Elevation

Scale: 1/4" = 1'-0"

DO NOT SCALE PRINTS THESE PLANS ARE THE PROPERTY OF THE ARCHITECT. ANY USE OR REPRODUCTION IN WHOLE OR PART WITHOUT THE WRITTEN AUTHORIZATION OF THE ARCHITECT IS PROHIBITED. ANY PERSON OR CORPORATION USING PLANS WITHOUT PROPER AUTHORIZATION WILL BE RESPONSIBLE TO COMPENSATE THE ARCHITECT.

THESE PLANS ARE NOT VALID FOR A BUILDING PERMIT UNLESS ORIGINALLY SIGNED AND SEALED BY THE ARCHITECT AND ARE FOR THE CONSTRUCTION OF ONE STRUCTURE ONLY BY THE PERSON WHOSE NAME APPEARS ON THE PLANS.

IT IS A VIOLATION OF THE LAW FOR ANY PERSON, UNLESS ACTING UNDER THE DIRECTION OF A LICENSED PROFESSIONAL, TO ALTER AN ITEM IN ANY WAY. IF AN ITEM BEARING THE SEAL OF A LICENSED PROFESSIONAL IS ALTERED, THE ALTERING LICENSED PROFESSIONAL SHALL AFFIX TO THEIR ITEM THEIR SEAL AND THE NOTATION "ALTERED BY" FOLLOWED BY THEIR SIGNATURE AND DATE OF SUCH ALTERATION, AND A SPECIFIC DESCRIPTION OF THE ALTERATION

DeMasi Architects P.C.
105 SMITH AVENUE, MOUNT KISCO, NEW YORK 10549
PHONE: (914) 666-3858
EMAIL: Love@DemasiArchitects.com WEBSITE: DemasiArchitects.com

REGISTERED ARCHITECT
STATE OF NEW YORK

Two Family Residence For
167 Maple Ave
Croton On Hudson, NY

Revision	Date

Date: Jan. 10, 2024

Job No: 223-080

Drawing: 8 OF 10

DO NOT SCALE PRINTS THESE PLANS ARE THE PROPERTY OF THE ARCHITECT. ANY USE OR REPRODUCTION IN WHOLE OR PART WITHOUT THE WRITTEN AUTHORIZATION OF THE ARCHITECT IS PROHIBITED. ANY PERSON OR CORPORATION USING PLANS WITHOUT PROPER AUTHORIZATION WILL BE RESPONSIBLE TO COMPENSATE THE ARCHITECT

THESE PLANS ARE NOT VALID FOR A BUILDING PERMIT UNLESS ORIGINALLY SIGNED AND SEALED BY THE ARCHITECT AND ARE FOR THE CONSTRUCTION OF ONE STRUCTURE ONLY BY THE PERSON WHOSE NAME APPEARS ON THE PLANS

IT IS A VIOLATION OF THE LAW FOR ANY PERSON UNLESS ACTING UNDER THE DIRECTION OF A LICENSED PROFESSIONAL TO ALTER AN ITEM IN ANY WAY. IF AN ITEM BEARING THE SEAL OF A LICENSED PROFESSIONAL IS ALTERED, THE ALTERING LICENSED PROFESSIONAL SHALL AFFIX TO THEIR ITEM THEIR SEAL AND THE NOTATION "ALTERED BY" FOLLOWED BY THEIR SIGNATURE AND DATE OF SUCH ALTERATION AND A SPECIFIC DESCRIPTION OF THE ALTERATION

General Conditions:

SPECIFICATIONS: These specifications are made in general form only and not specifically for any one building. The owner applying these specifications, assumes complete responsibility for their use, changes, or omissions.

SCOPE OF WORK: The Contractor shall provide all labor, materials, appliances and equipment required to complete all work, etc., as shown on the drawings necessary for a complete job, unless otherwise specified. All material and workmanship shall be of good quality.

OMISSIONS: All written figures (notes and dimensions) on the floor plans or specifications shall take precedence over any drawn figures (elevations). Do not scale prints. All dimensions must be verified by the contractor before start of construction. Any discrepancies on the plans or specifications must be reported to the Architect prior to the start of construction.

CODES: All work and materials must conform to all local and The 2020 Residential Code Of New York State, National Board of Fire Underwriters, NYStretch Energy Code 2020 Of New York State and requirements of the Board of Health.

ACCEPTABLE BUILDING STANDARDS: Installation of materials shall comply with industry standards as instituted by the national association or equivalent group of material used. Acceptable associations shall include, but are not limited to, the following: Western Wood Products Assoc., Cedar Shake & Shingle Bureau, Brick Industry Assoc., Tile Council of America, National Roofing Contractors Assoc. and American Concrete Institute, etc.

MATERIALS: Shall be installed according to the manufacturer's specifications. All work shall comply with applicable sections of the state and local codes and the generally accepted standards as listed in the state building code.

PERMANENT CERTIFICATION: A permanent certificate shall be completed by the builder or registered design professional and posted on a wall in the space where the furnace is located, a utility room or an approved location inside the building. Where located on an electrical panel, the certificate shall not cover or obstruct the visibility of the circuit directory label, service disconnect label or other required labels. The certificate shall list the predominant R-values of insulation installed in or on ceiling/roof, walls, foundation (slab, basement wall, crawlspace wall and floor) and ducts outside conditioned spaces; U-factors for fenestration and the solar heat gain coefficient (SHGC) of fenestration, and the results from any required duct system and building envelope air leakage testing done on the building. Where there is more than one value for each component, the certificate shall list the value covering the largest area. The certificate shall list the types and efficiencies of heating, cooling and service water heating equipment. Where a gas-fired unvented room heater, electric furnace or baseboard electric heater is installed in the residence, the certificate shall list "gas-fired unvented room heater,""electric furnace"; or "baseboard electric heater," as appropriate. An efficiency shall not be listed for gas-fired unvented room heaters, electric furnaces or electric baseboard heaters. See Section R401.3 Of the NYStretch Energy Code 2020

SITE CONDITIONS: The General Contractor shall verify all conditions before submitting his proposal. No allowance for extra charges will be permitted because of lack of knowledge of the conditions peculiar thereto except as otherwise specified elsewhere in the contract documents. Each contractor will be responsible for his own engineering and layout once the owner has established property lines and minimum number of benchmarks. The contractor shall verify all lines, levels and dimensions shown on the drawings and will be held responsible for the correctness and setting out of his work.

OWNERSHIP OF PLANS: These plans are the property of DeMasi Architects P.C. Any use or reproduction, in whole or in part, without the written authorization of DeMasi Architects P.C. is prohibited. Any person or corporation using plans without proper authorization will be responsible to compensate the Architect. This plan is for the construction of one house only.

ARCHITECT STATUS: Architect has not been retained by owner to provide periodic job inspections or job administration. Purchaser of the plans shall assume full responsibilities for any deviations or changes to these plans.

Excavation:

FOUNDATION: Excavate all earth, boulders, loose and soft rock to the lines and depths indicated on the drawings. All footings to bear on solid, undisturbed earth. Excavate for all utilities as required.

FOOTINGS: To bear 12" below line of solid undisturbed earth. Design of footings are based on 2,000 psi soil. If soil bearing conditions are questionable, contractor shall consult engineer for footing design. Sloped footings shall be 1:2 max. slope. Provide (2) #4 bars continuous (refer to wall section). All footings bearing from rock to soil shall be reinforced with (4) #5 bars (6' min. on both sides of joint). Dowel and pin all footings bearing on rock with a slope greater than 7:12 (30 degrees) w/ #4 dowels @ 24" o/c max.

FINISH GRADING: Finish grading shall be established to provide surface drainage in all directions away from the house and excavated areas.

Concrete & Masonry:

Weathering Condition: Severe

CONCRETE: Shall be a min. F'c = 3,000 psi compressive strength for footings & foundation walls and F'c = 3,500 psi compressive strength for porches, steps & garage floors. Concrete shall be "Air Entrained", total air content shall not be less than 5 % or more than 7 %. All concrete work shall conform to the lastest American Concrete Institute (ACI) guidelines.

CONCRETE FLOORS: Shall have a smooth, dense steel trowel finish, suitable to receive composition flooring. Concrete floors in living areas shall have 6 mil. poly vapor barrier and 2" x 24" (min.) rigid polystyrene foam insulation around the perimeter of the slab, where slab is within 2'-0" of grade. Pitch all garage and porch floors for drainage. (1/8"/ft. min.)

POURED CONCRETE FOUNDATION: Shall comply with the latest edition of American Concrete Institute Specification and shall be plumb, straight, level and true. Forms to be properly constructed to hold concrete. Provide (2) #4 bars located at top and bottom of wall. All reinforcing bars for concrete work shall conform to A.S.T.M. A615 grade 60.

MASONRY: Concrete block shall be load bearing laid level, plumb and straight in a full bed of cement mortar (TYPE "S") with galvanized metal truss-type ties @ 24" horizontal and vertical. All joints to be well tooled. All masonry work shall conform to ACI 530 code and all reinforcement work shall conform to ACI 318-11. Fill top two courses solid with cement mortar.

MASONRY CHIMNEY & FIREPLACES: Where shown on the plans, shall be brick or stone where exposed and laid in a full bed of cement mortar with well tooled joints. Flues to be fire clay, size shown on the plans. Provide cast iron damper, ash pit and clean-out doors. Provide for proper clearances with combustible construction. Firestop at all clearances with non-combustible material. Contractor shall ensure proper clearances of chimney and fireplace per 2020 Residential Code Of New York State And NYStretch Energy Code 2020.

PRE FAB CHIMNEY AND FIREPLACE: Installation of prefab flues and fireplaces shall be in strict accordance with manufacturer's specification. Install firestops as required by code. Fireplace shall be metal prefab with compatible flue and shall be UL listed.

FIREPLACES: All fireplaces shall have tempered glass fire doors and closable combustion air intake ducts and comply with the NYStretch Energy Code 2020

DAMPROOFING: Foundation wall shall be damproofed with two (2) coats of asphalt waterproofing over 1/2" cement parge (block wall) or cement wash (poured wall). Provide 4" perforated pipe footing drain laid in 16" stone with layer of salt hay over. Drain to outflow above ground or stone drywell.

DAMPROOFING: Provide a complete TUFF-N-DRI Exterior Foundation Waterproofing System as manufactured by KOCH MATERIALS COMPANY or equal. Provide 4" perforated PVC footing drain laid in 16" deep (min.) stone with a layer of salt hay over. Drain to outflow above ground, min. 30' from house, when not permitted, provide drywell.

DAMPROOFING: In areas of high water table or severe soil-water conditions are known to exist, provide 2-ply hot mopped felts, 55 pound roll roofing from top of footing to finished grade. All joints are to be lapped and sealed with adhesive.

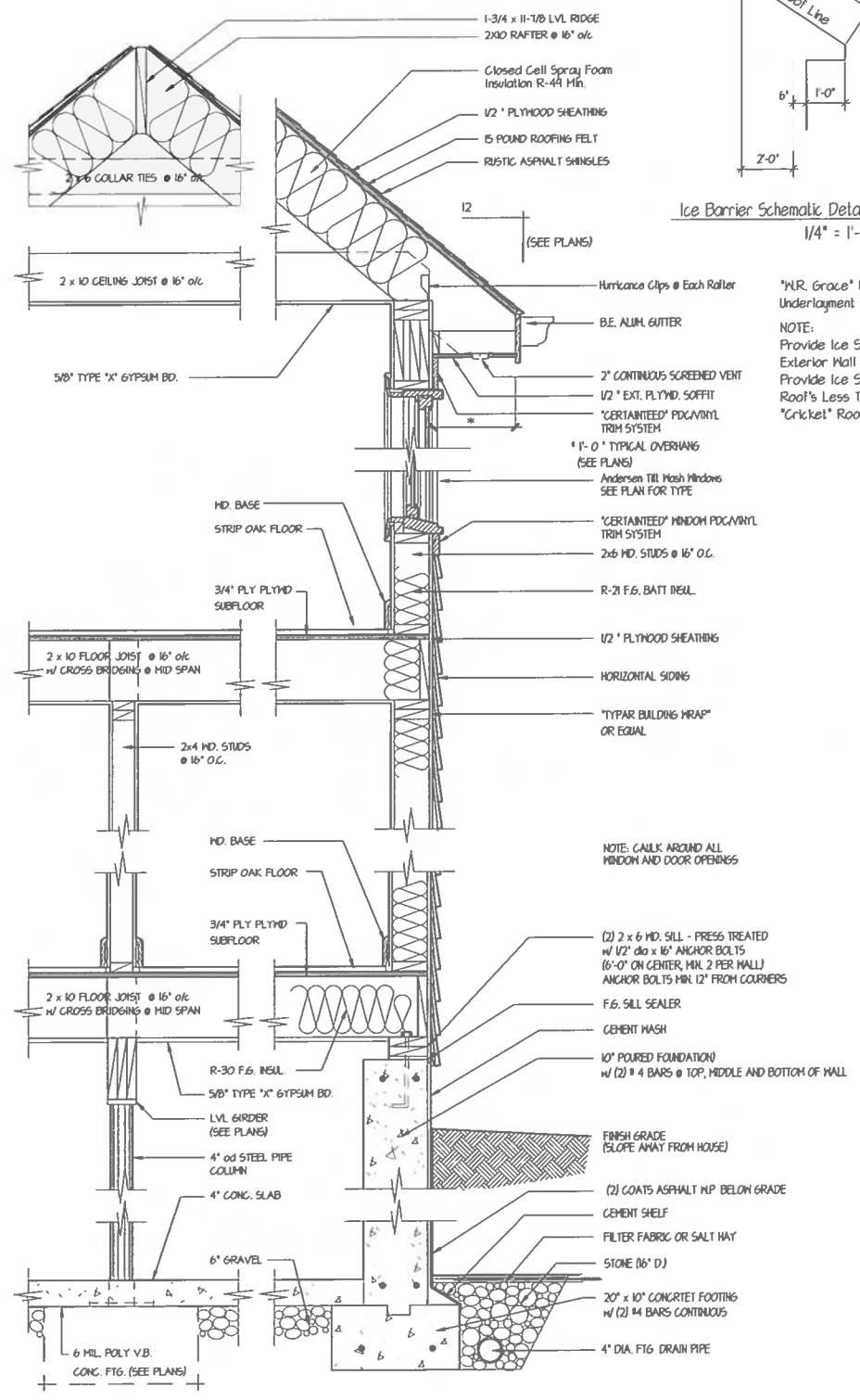

TYPICAL WALL SECTION

SCALE: 1" = 1'-0"

NOTE:
SEE ELEVATIONS FOR WINDOW & FLR. HEIGHTS AS REQ'D

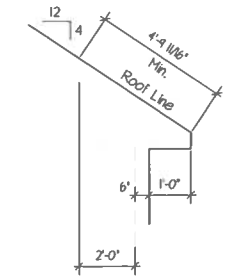

Ice Barrier Schematic Detail

1/4" = 1'-0"

"W.R. Grace" Ice & Water Shield Underlayment @ Eave & Valley's

NOTE:
Provide Ice Shield Min 24" Inside Exterior Wall Line Per Manuf. Spec. Provide Ice Shield Underlayment All Roof's Less Than 3:12 Pitch & At All "Cricket" Roof Areas.

DeMasi Architects P.C.
105 SMITH AVENUE, MOUNT KISCO, NEW YORK 10549
PHONE: (914) 666-3858
EMAIL: Lou@DemasiArchitects.com WEBSITE: DemasiArchitects.com

Two Family Residence For
167 Maple Ave
Croton On Hudson, NY

Revision	Date

Date: Jan. 10, 2024

Job No: 223-080

Drawing: 9 OF 10

IT IS A VIOLATION OF THE LAW FOR ANY PERSON, UNLESS ACTING UNDER THE DIRECTION OF A LICENSED PROFESSIONAL, TO ALTER AN ITEM IN ANY WAY. IF AN ITEM BEARING THE SEAL OF A LICENSED PROFESSIONAL IS ALTERED, THE ALTERING LICENSED PROFESSIONAL SHALL AFFIX TO THEIR ITEM THEIR SEAL AND THE NOTATION "ALTERED BY" FOLLOWED BY THEIR SIGNATURE AND DATE OF SUCH ALTERATION, AND A SPECIFIC DESCRIPTION OF THE ALTERATION

THESE PLANS ARE NOT VALID FOR A BUILDING PERMIT UNLESS ORIGINALLY SIGNED AND SEALED BY THE ARCHITECT AND ARE FOR THE CONSTRUCTION OF ONE STRUCTURE ONLY BY THE PERSON WHOSE NAME APPEARS ON THE PLANS.

DO NOT SCALE PRINTS THESE PLANS ARE THE PROPERTY OF THE ARCHITECT. ANY USE OR REPRODUCTION IN WHOLE OR PART WITHOUT THE WRITTEN AUTHORIZATION OF THE ARCHITECT IS PROHIBITED. ANY PERSON OR CORPORATION USING PLANS WITHOUT PROPER AUTHORIZATION WILL BE RESPONSIBLE TO COMPENSATE THE ARCHITECT

Miscellaneous Metals:

STEEL: Shall conform to ASTM specification A-36 for structural steel.

FLITCH BEAMS: All steel plates shall conform to ASTM specifications A-36 for structural steel. All bolt holes to be properly drilled. Torched holes are not acceptable.

ANCHOR BOLTS: Provide1/2" dia. X 16" with hooked end. Bolts to be placed 6-0" o.c. max., 12" min. from corner and 2 bolts min. per sill. Consult Architect for anchoring in other seismic zone.

Carpentry:

Decay Design Condition: Slight - Moderate

Termite Design Condition: Moderate - Heavy.

Design Loads;

First Floor Loads	Live Load	40 #/sf
	Dead Load	12 #/sf
Second Floor Loads	Live Load	30 #/sf
	Dead Load	12 #/sf
Attic Load (< 4'-6" Headroom)	Live Load	20 #/sf
	Dead Load	12 #/sf
(> 4'-6" Headroom)	Live Load	30 #/sf
	Dead Load	12 #/sf
Ground Snow Load	Live Load	45 #/sf
	Dead load	7 #/sf

Wind Speed Design load: 115-120 mph

LUMBER: All framing lumber to be stress grade Douglas Fir Larch No. 2 or better.

FRAMING: Framing of the entire house shall be erected plumb, level and true, securely nailed. Joists, studs and rafters shall be doubled above all openings. All flush headers shall be connected with metal joist hangers. Double frame under all partitions parallel to framing. Sizes of joists, sheathing and rafters are shown on plans. Provide solid blocking under all posts. Contractor to provide all fire blocking at all stud wall over 10'-0" high or all horizontal furred spaces at 10'-0" intervals max.

TERMITE SHIELD: Shall be bent aluminum with sealed lapped joints (refer to wall section for other information).

SILL PLATES: All wood sill plates that rest on concrete or masonry exterior walls shall be pressure preservatively treated in accordance with AWPA standards or shall be of decay-resistant heartwood of redwood, black locust, or cedars. All sill plates to be set on fiberglass sill sealer or equal.

GLULAM BEAM: Shall be No. 1 Douglas Dir (min. Fb-2200 PSI).

LAMINATED VENEER BEAM: Shall be "Microlam 1.9E" by Trus Joist Weyerhaeuser or equal, min. fb. 2600. Install as per manufacturer's specifications. Install as per manufacturer's specifications.

PLYWOOD JOISTS: Shall be "TJI/Pro" Joists by Trus Joist Weyerhaeuser. Install as per manufacturer's specifications.

SUB FLOOR: Shall be 3/4" T&G interior with exterior glue plywood glued and screwed to each framing member @ 6" o/c.

SHEATHING: Shall be 1/2" exterior grade plywood nailed to each framing member.

WOOD DECKS AND RAILINGS: Where shown on plans, shall be pressure treated No. 1 Southern yellow pine wood. All nails, bolts and all metal fastenings to be hot-dipped galvanized steel, silicon bronze or copper (see detail).

BRICK OR STONE VENEER: Shall be as shown on plans, laid in cement mortar with galvanized metal wall ties 24" horizontal and vertical. Provide weep holes at 4' o/c max. or as required (option: provide "MortarNet" at bottom of cavity). All joints to be well tooled. Brick and/or stone shall be selected by owner.

WINDOWS: Shall be ANDERSEN Perma-shield or equal windows with insulated "Low E" glass and screens. Size and type shown on plans. Provide tempered glass where shown or where within 18" of floor.

FRENCH DOORS: Shall be ANDERSEN Frenchwood or equal with tempered insulated "Low E" glass and screens.

BEVEL SIDING: Shall be Western Red cedar (see plans for size). Provide 3/8" x 1 1/2" wood starter strip set to true level 1/4" up from bottom edge of siding. Lap siding 1" min. over course below, placing all end joints over stud bearing.

INTERIOR DOORS: Interior doors shall be 1 3/8" flush mahogany stain grade or 6 panel pre-hung units, complete with hardware and casing. Siding, bi-fold and pocket doors shall be 1 3/8" flush mahogany or 6 panel doors or as shown on plans, complete with hardware. Provide a self-closing "C" label insulated door and frame between garage and house.

EXTERIOR TRIM: Shall be rough sawn cedar or pine. Size and shape shown on plans.

INTERIOR TRIM: Shall be stock sections of pine and shall be neatly fitted and mitered and complete, including doors and window casings, aprons, and stools, base at the floor. Closets to have one 3/4" shelf with clothes pole adequately supported. Linen closets to have five (5) 3/4" shelves.

WOOD STAIR: Provide oak tread stair, size shown on the plan. Provide complete hardwood railing, post, newel, and balusters (4 1/2" o.c. max.) as required. Stair to have oaktread (9" w/ 1 1/8" nosing @ closed stair), clear pine stringer and risers (8 1/4" max.). Provide oak tread return and bullnose on open sides. Stair shall be glued and wedged. All trim to be mitered and glued. Stair shall be fabricated in millshop by professional stair- builder. The general contractor shall be responsible to field check and verify stair dimensions and compliance with local & state building codes.

FLOORS: Wood floors shall be 25/32 strip oak securely nailed to joists over a layer of rosin paper. Composition floors shall be 1/16" vinyl set in mastic on concrete, or 5/8" exterior A/C plywood underlayment in joist areas.

ATTIC/ CRAWLSPACE ACCESS: Access doors from conditioned spaces to unconditioned spaces such as attics and crawl spaces shall be weatherstripped and insulated to a level equivalent to the insulation on the surrounding surfaces. Access shall be provided to all equipment that prevents damaging or compressing the insulation. A wood-framed or equivalent baffle or retainer is required to be provided when loose-fill insulation is installed, the purpose of which is to prevent the loose-fill insulation from spilling into the living space when the attic access is opened, and to provide a permanent means of maintaining the installed R-value of the loose-fill insulation. See Section R402.2.4 Of the NYStretch Energy Code 2020.

BUILDING CAVITIES: Building framing cavities shall not be used as ducts or plenums As Per Section R403.3.5 Of the NYStretch Energy Code 2020.

ROOFING: All chimneys shall be properly flashed. Provide self-sealing rubberized waterproof membrane (36" wide min.) at all eaves, openings, hips, valleys, and ridges by W.R. Grace and Company or equal (ice and watershield). All roofing shall be installed by qualified roofing contractors, in strict accordance with manufacturer's specifications.

ASPHALT SHINGLE ROOF: Shall be 30-yr rustic asphalt shingles laid on 15 lb. roofing felt.

ROOF VENTILATION: Ventilate all attic and rafter spaces with proper sized screened ridge and soffit vents or louvers (see plans).

GYPSUM BOARD: 1/2" nailed with rosin nails according to manufacturer's specifications. All joints to be taped and receive three (3) coats of joint compound. Finish to be smooth and even, ready for painting. Provide 5/8" type "X" gypsum board at both sides of garage house walls and ceilings. Also, provide 100 SF min. over furnace.

GUTTERS AND LEADERS: Provide baked enamel gutters and leaders as required. All leaders and gutters are to be properly supported at all joint areas.

INSULATION: Shall be fiberglass batts with vapor barrier. Provide insulation as per NYStretch Energy Code 2020 Section R402.
RES-CHECK software is allowed to be used to calculate insulation requirements.

Tile Work:

CERAMIC TILE: Baths and lavatory floors to receive matt glazed ceramic tile set in thin-set grout. Installation to be as per latest edition of the Tile Council of America specifications. Consult Architect if other setting methods are to be used to verify floor structure. Tub and shower wall to receive glazed ceramic tile set in mastic 6' high (min.) Provide water-resistant cement backer boards to tub shower walls and wet areas.

ACCESSORIES AND ATTACHMENTS: Provide ceramic accessories such as soap dish, paper holder, 2 towel bars per bath. Provide mirror medicine cabinet with light over. Provide formica stock vanity where shown on plans.

Painting:

EXTERIOR: Siding, fascias, and trim shall receive one (1) prime coat and one (1) finish coat of exterior stain or paint.

INTERIOR: Walls to receive one (1) prime coat and one (1) finish coat of latex or oil flat paint. Flush hardwood doors to receive one (1) coat of stain and one (1) coat of satin polyurethane finish. Six (6) panel doors to receive one (1) coat primer and one (1) coat of satin enamel finish. Floors to be sanded and receive one (1) coat of sealer and one (1) coat of floor polyurethane, gloss finish.

TRIM AND MISCELLANEOUS WOOD: Shall have one (1) prime coat and one (1) finish coat of satin enamel.

Heating:

HEATING and AIR CONDITIONING: Shall be oil-fired hydro-air system, complete with boiler, hydronic zone controls, thermostates, oil tank, etc for 5 zones. Provide domestic hot water coil or separate circulating storage tank if required in boiler. Provide air handling units, condensers, insulated supply ducts and vents to each room. Heating and cooling system to be designed and guaranteed to conform to the latest ASHREA specifications and the NYStretch Of New York State. Heating system shall be designed and guaranteed to maintain 73° degrees F indoor temperature with 7° degrees F outdoor temperature.

DUCTS: All ducts shall be fabricated and rigidly installed with required bracing and supports. The main supply and return duct shall be isolated from the heater and blower by means of fabric insulators. Provide duct damper for each run. Insulate all ducts located in garage, attic, and unheated areas

DUCT TESTING: Ducts shall be pressure tested to determine air leakage by one of the following methods: Rough-in test Or Postconstruction test. A written report of the results of the test shall be signed by the party conducting the test and provided to the code official. See Section R403.3.3 Of the NYStretch Energy Code 2020.

EQUIPMENT SIZING AND EFFICIENCY RATING: Heating and cooling equipment shall be sized in accordance with ACCA Manual S based on building loads calculated in accordance with ACCA Manual J or other approved heating and cooling calculation methodologies. New or replacement heating and cooling equipment shall have an efficiency rating equal to or greater than the minimum required by federal law for the geographic location where the equipment is installed. See Section R403.7 Of the NYStretch Energy Code 2020 For More Detail.

GRILLS AND REGISTERS: Provide supply and return registers in each room. All supply grills to have adjustable dampers.

BALANCING: Heating contractor shall balance entire house so that all rooms heat evenly to the required temperature set on the thermostat.

Temperature Controls:

The thermostat controlling the primary heating or cooling system of the dwelling unit shall be capable of controlling the heating and cooling system on a daily schedule to maintain different temperature setpoints at different times of the day. This thermostat shall include the capability to set back or temporarily operate the system to maintain zone temperatures of not less than 55 F (13 C) to not greater than 85 F (29 C). The thermostat shall be programmed initially by the manufacturer with a heating temperature setpoint of not greater than 70 F (21 C) and a cooling temperature setpoint of not less than 78 F (26 C).

Plumbing:

WORK INCLUDED: Contractor shall furnish all labor, materials and equipment required to fully complete all plumbing work shown on plans.

FLASHING: All pipes passing through roof shall receive aluminum collar, strapped and fitted to provide water-proof seal.

TESTING: Contractor shall test all water, drainage, and vent piping in accordance with local codes.

WATER SUPPLY: Water supply in street or well shall be extended to house with 1" heavy copper pipe and entire house shall be supplied with both hot and cold water by means of heavy copper pipe of appropriate sizes, min. 3/4" sub main to each bath, kitchen, and laundry. The weather resistant hose fittings shall be supplied. Provide hook-up for washer where shown.

DRAINAGE SYSTEM: Shall be installed in accordance with local codes and ordinances and shall be complete with copper drains and copper vents, house traps, cleanouts, etc connected to street sewer or septic system. Drains under concrete to be cast iron.

FIXTURES: As shown on plans shall be AMERICAN STANDARD, KOHLER, or equal. All exposed fittings and pipe to be chrome plated.

SEPTIC AND WELL SYSTEMS: (if required) shall conform to all requirements of the Board of Health.

Electrical:

Electrical system to be designed to comply with NEC 70 specification.

Electrical: Provide a minimum of 120/208-200 amp, or larger, if required, for service. Switches to be silent type. Locations of outlets, fixtures, etc, as shown on plans. All electric work to conform to the National Board of Fire Underwriters Codes. Provide a complete door bell system.

Contractor to provide exhaust fans at both rooms (vent to exterior). Provide & install as per code.

Contractor to provide smoke & heat detectors with battery back-up (see plans for location). Detectors shall conform to all applicable codes and shall be installed as per code R314.3. Hard-wire and interconnected per section R314.4

Contractor to provide carbon monoxide detectors with battery back-up (see plans for location). Detectors shall conform to all applicable codes and shall be installed as per building code. Section R315.1

Lighting Equipment: Not less than 90 percent of the permanently installed lighting fixtures shall contain only high-efficacy lamps. Of The NYStretch Energy Code 2020.

MECHANICAL VENTILATION: The building shall be provided with ventilation that meets the requirements of the NYStretch Energy Code 2020 or 2020 Mechanical Code Of New York State, as applicable, or with other approved means of ventilation. Outdoor air intakes and exhausts shall have automatic or gravity dampers that close when the ventilation system is not operating. See Section R403.6 Of the NYStretch Energy Code 2020 For More Detail.

Site Work:

SITE WORK: Provide 2" blacktop driveway, 4" gravel base to street. Sidewalks to be 3' wide, 4" concrete or 1 1/2" flagstone laid in sand, from house to driveway. Provide top soil and seed to all areas disturbed by construction.

Insulation / Energy Code:

Refer to "RES CHECK" energy study attached to plans or fixed to first page.

INSULATION: Shall be fiberglass batt with foil faced vapor barrier, "R" value stated on attached RES-CHECK.

Pack insulation in all cavities around all exterior windows, doors and other openings.

AIR LEAKAGE: Joints, penetrations, and all other such openings in the building envelope that are sources of air leakage must be sealed in accordance with the requirements of Sections R402.4.1 through R402.4.4. Of the 2020 Energy Conservation Code Of New York State. Recessed lights must 1) Type IC rated, or 2) installed inside an appropriate air-tight assembly with a 0.5" clearance from combustible materials. If non-IC rated, the fixture must be installed with a 3" clearance from insulation.

VAPOR RETARDER: Required on the warm-in-winter side of all non-vented framed ceilings, walls, and floors.

Material Identification:

Materials and equipment must be installed in accordance with the manufacturer's installation instructions.
Materials and equipment must be identified so that compliance can be determined.
Manufacturer manuals for all installed heating and cooling equipment and service water heating equipment must be provided. Insulation R-values and glazing U-factors must be clearly marked on the building plans or specifications.

Duct Insulation:

Supply and return ducts in attics shall be insulated to an R-value of not less than R-8 for ducts 3 inches (76 mm) in diameter and larger and not less than R-6 for ducts smaller than 3 inches (76 mm) in diameter.

Supply and return ducts in other portions of the building shall be insulated to not less than R-6 for ducts 3 inches (76 mm) in diameter and to not less than R-4.2 for ducts smaller than 3 inches (76.2 mm) in diameter. Exception being ducts located in conditioned spaces. See 2020 Residence Code Of New York State.

Ducts buried within ceiling insulation both supply and return shall have an insulation R-value not less than R-8. At all points along each duct, the sum of the ceiling insulation R-values against and above the top of the duct, and against and below the bottom of the duct shall be not less than R-19, excluding the R-value of the duct insulation.

Duct Construction:

All joints, seams, and connections must be securely fastened with welds, gaskets, mastics (adhesives), mastic-plus-embedded-fabric, or tapes. Duct tape is not permitted.
- Exception: Continuously welded and locking-type longitudinal joints and seams on ducts operating at less than 2 in. W.g. (500 Pa).
- Exception: Air-impermeable spray foam products shall be permitted to be applied without additional joint seals.

Ducts shall be supported every 10 feet or in accordance with the manufacturer's instructions.

Cooling ducts with exterior insulation must be covered with a vapor retarder.

Air filters are required in the return air system.

The HVAC system must provide a means for balancing air and water systems.

Electrical Systems:

Separate electric meters are required for each dwelling unit.

Fireplaces:

Fireplaces must be installed with tight fitting non-combustible fireplace doors. Fireplaces must be provided with a source of combustion air, as required by the Fireplace construction provisions of the Building Code, the Residential Code as applicable.

Service Water Heating:

Water heaters with vertical pipe risers must have a heat trap on both the inlet and outlet unless the water heater has an integral heat trap or is part of a circulating system.

Swimming Pools:

All heated swimming pools must have an on/off heater switch and require a cover unless over 20% of the heating energy is from non-depletable sources. Pool pumps require a time clock.

Heating & Cooling Piping Insulation:

Mechanical system piping capable of carrying fluids above 105 degrees F or chilled fluids below 55 degrees F must be insulated to a Minimum of R-3. See Section R403.4 of the NYStretch Energy Code 2020 for more detail.

DeMasi Architects P.C.
105 SMITH AVENUE, MOUNT KISCO, NEW YORK 10549
PHONE: (914) 666-3858
EMAIL: Lou@DemasiArchitects.com WEBSITE: DemasiArchitects.com

Two Family Residence For
167 Maple Ave
Croton On Hudson, NY

Revision	Date

Date: Jan. 10, 2024
Job No: 223-080
Drawing: 10 OF 10