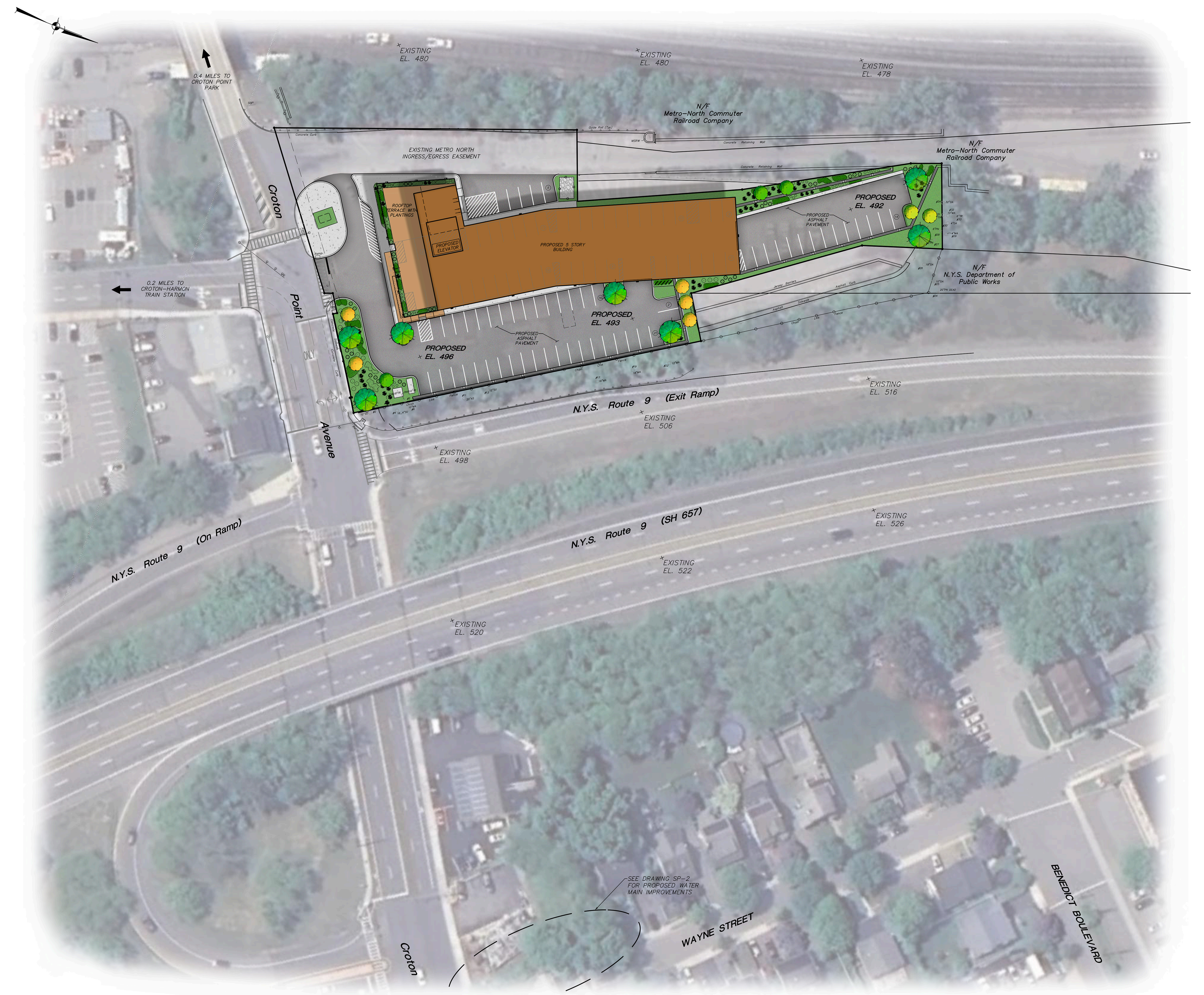
EXISTING EL. 480
EXISTING EL. 480
EXISTING EL. 478
0.4 MILES TO CROTON POINT PARK
0.2 MILES TO CROTON–HARMON TRAIN STATION
N/F Metro–North Commuter Railroad Company
N/F Metro–North Commuter Railroad Company
N/F N.Y.S. Department of Public Works
EXISTING METRO NORTH INGRESS/EGRESS EASEMENT
Guide Rail (Typ)
Concrete Curb
Concrete Retaining Wall
MSRW
Sign
Ramp
Croton Point Avenue
ROOFTOP TERRACE WITH PLANTINGS
PROPOSED ELEVATOR
PROPOSED 5 STORY BUILDING
PROPOSED ASPHALT PAVEMENT
PROPOSED ASPHALT PAVEMENT
PROPOSED EL. 496
PROPOSED EL. 493
PROPOSED EL. 492
Concrete Sidewalk
Concrete Curb
ONLY
Jersey Barriers
Asphalt Curb
Asphalt Sidewalk
Chain Link Fence
N.Y.S. Route 9 (Exit Ramp)
EXISTING EL. 516
EXISTING EL. 506
EXISTING EL. 498
N.Y.S. Route 9 (SH 657)
N.Y.S. Route 9 (On Ramp)
EXISTING EL. 526
EXISTING EL. 522
EXISTING EL. 520
SEE DRAWING SP–2 FOR PROPOSED WATER MAIN IMPROVEMENTS
WAYNE STREET
BENEDICT BOULEVARD
Croton

ALTERATION OF THIS DOCUMENT, UNLESS UNDER THE DIRECTION OF A LICENSED PROFESSIONAL ENGINEER, IS A VIOLATION OF SECTION 7209 OF ARTICLE 145 OF THE EDUCATION LAW.

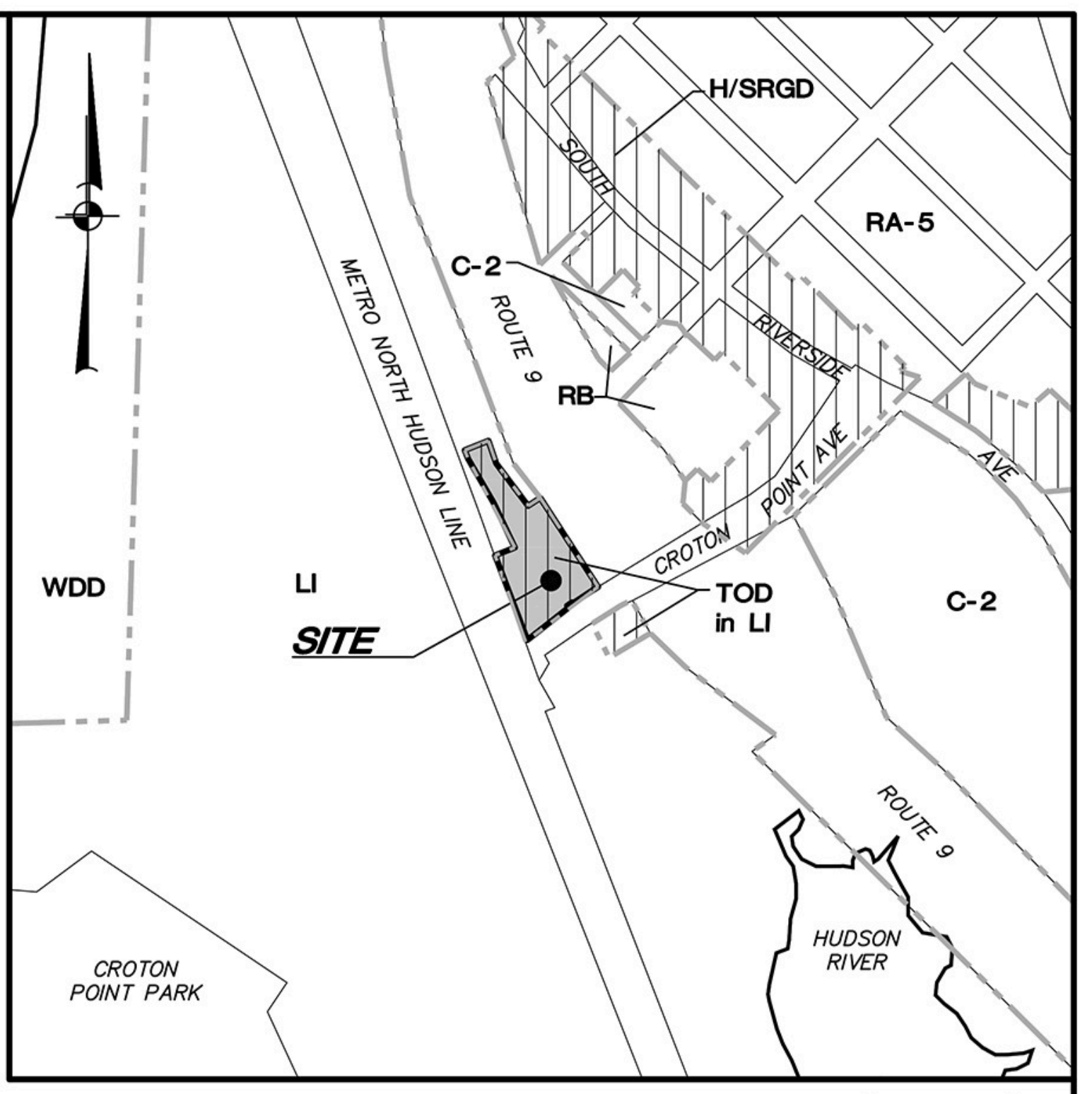
H/SRGD
SOUTH
RA-5
C-2
ROUTE 9
RB
RIVERSIDE
METRO NORTH HUDSON LINE
CROTON POINT AVE
AVE
WDD
LI
SITE
TOD in LI
C-2
ROUTE 9
CROTON POINT PARK
HUDSON RIVER

LOCATION MAP SCALE: 1" = 500'±

OWNER (LOTS 3&5):

VILLAGE OF CROTON–ON–HUDSON
1 VAN WYCK STREET
CROTON–ON–HUDSON, NY 10520

OWNER (LOT 4):

CROTON POINT REALTY, INC
1 CROTON POINT AVE
CROTON–ON–HUDSON, NY 10520

SPONSOR / DEVELOPER:

WBP DEVELOPMENT, LLC
480 BEDFORD ROAD
CHAPPAQUA, NY 10514–1715

SITE DATA:

Zone:	LI–Light Industrial with a TOD–Transitoriented Development Overlay
Total Acreage	1.7578 AC.±
Tax Map Nos.:	
1. 79.17–1–3	0.2205 AC.±
2. 79.17–1–4	0.2884 AC.±
3. 79.17–1–5	1.2489 AC.±

GENERAL NOTES:

1. Property lines, existing conditions and topography shown hereon field located by Insite Engineering, Surveying & Landscape Architecture, P.C. Topographic datum is NAVD 1988.
2. Aerial orthoimagery shown hereon is taken from Google Earth Pro, dated May 10, 2023.

LEGEND

━━━━	EXISTING PROPERTY LINE
—o—o—o—	EXISTING GUIDE RAIL
—○—○—○—	EXISTING CHAIN LINK FENCE
—\\—\\—\\—	EXISTING POST & RAIL FENCE
═══	EXISTING CURB
⊸	EXISTING SIGN
═══	PROPOSED CONCRETE CURB

DRAWING LIST:

SHEET	DRAWING NO.	DRAWING NAME:
1	OP–1	OVERALL SITE PLAN
2	EX–1	EXISTING CONDITIONS & REMOVALS PLAN
3	SP–1	LAYOUT & LANDSCAPE PLAN
4	SP–2	GRADING & UTILITIES PLAN
5	SP–3	EROSION & SEDIMENT CONTROLS PLAN
6	LP–1	PHOTOMETRIC LIGHTING PLAN
7	D–1	DETAILS
8	D–2	DETAILS
9	D–3	DETAILS
10	GIR–1	GEOTECHNICAL INSPECTION REPORTS

GRAPHIC SCALE

0 15 30 60

(IN FEET)
1 inch = 30 ft.

NO.	DATE	REVISION	BY
3	2–26–25	REVISED PER VILLAGE COMMENTS	NFB
2	9–24–24	REVISED PER VILLAGE COMMENTS	NFB
1	8–1–24	REVISED PER VILLAGE COMMENTS	TSM

INSITE
ENGINEERING, SURVEYING &
LANDSCAPE ARCHITECTURE, P.C.

3 Garrett Place
Carmel, NY 10512
(845) 225–9690
(845) 225–9717 fax
www.insite–eng.com

PROJECT:

1 CROTON POINT

CROTON POINT AVE. & VETERANS PLAZA, VILLAGE OF
CROTON–ON–HUDSON, WESTCHESTER CO., NY

DRAWING:

OVERALL PLAN

RICHARD D. WILLIAMS JR.
085866

PROJECT NUMBER	24154.100	PROJECT MANAGER	R.D.W.
DATE	7–11–24	DRAWN BY	M.E.U.
SCALE	1" = 30'	CHECKED BY	D.L.M.

DRAWING NO. OP–1

SHEET 1/10

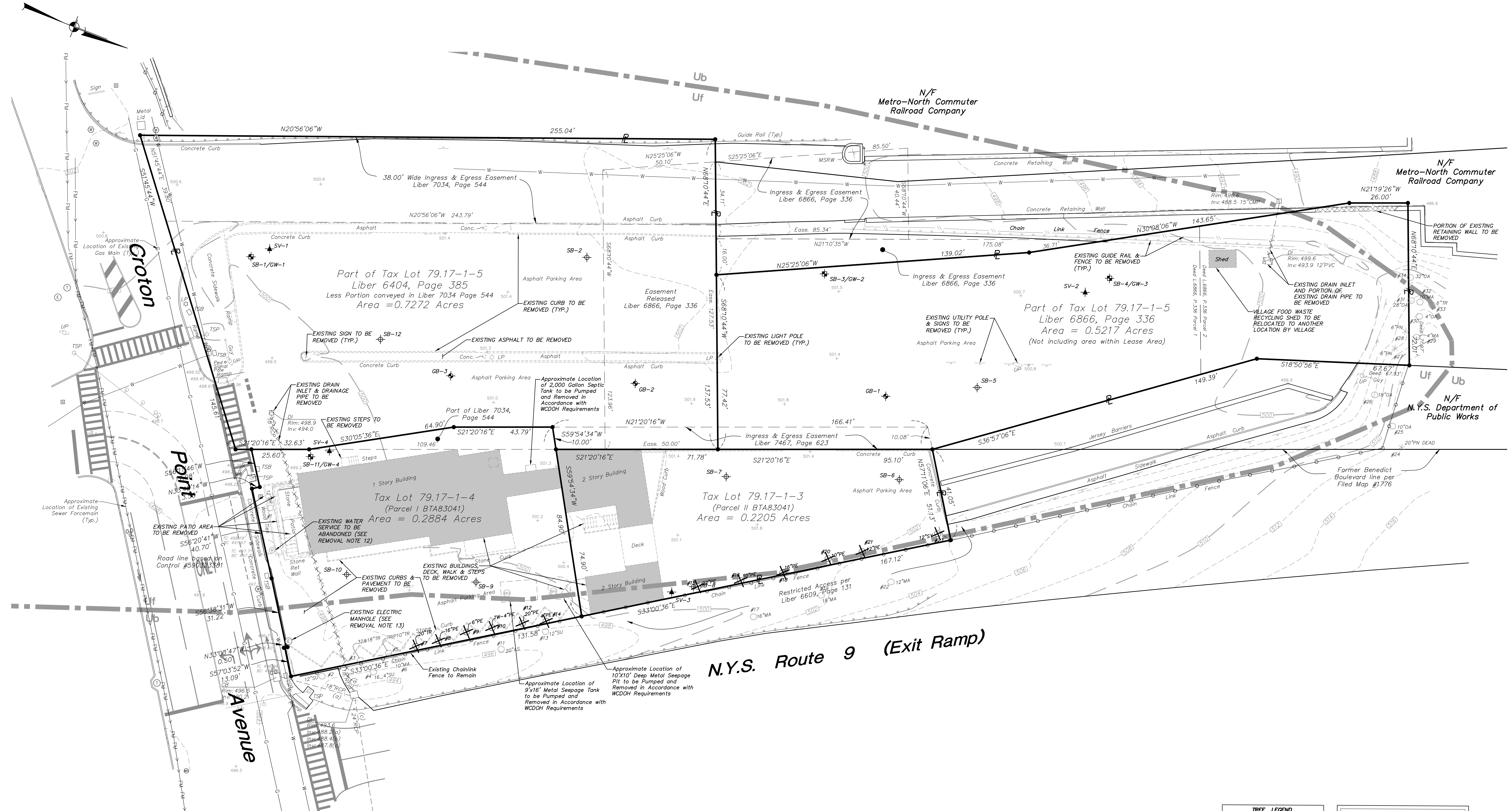
N/F
Metro–North Commuter
Railroad Company
Ub
Uf
N20°56'06"W
255.04'
Guide Rail (Typ)
Metal Lid
Sign
Concrete Curb
N51°45'44"E 39.80'
S51°45'44"W
38.00' Wide Ingress & Egress Easement
Liber 7034, Page 544
N20°56'06"W 243.79'
Asphalt
Conc.
Approximate Location of Existing Gas Main (Typ)
Croton
Point
Avenue
Concrete Sidewalk
Ramp
TSB
TSP
LP
UP
Guy
Ped Signal Pole
SV–1
SB–1/GW–1
Part of Tax Lot 79.17–1–5
Liber 6404, Page 385
Less Portion conveyed in Liber 7034 Page 544
Area =0.7272 Acres
Asphalt Parking Area
EXISTING CURB TO BE REMOVED (TYP.)
EXISTING SIGN TO BE REMOVED (TYP.)
SB–12
EXISTING ASPHALT TO BE REMOVED
GB–3
SB–2
N25°25'06"W
50.10'
S25°25'06"E
MSRW
85.50'
N68°10'44"E
34.11'
Ingress & Egress Easement
Liber 6866, Page 336
S68°10'44"W
40.44'
Asphalt Curb
Ease. 85.34'
N21°10'35"W
175.08'
36.71'
139.02'
N25°25'06"W
SB–3/GW–2
Easement Released
Liber 6866, Page 336
Ease. 127.53'
16.00'
EXISTING LIGHT POLE TO BE REMOVED (TYP.)
123.96'
137.53'
77.42'
GB–2
GB–1
SB–5
Concrete Retaining Wall
Chain Link Fence
N30°08'06"W
143.65'
DI
Rim: 490.6
Inv: 488.5 15"CMP
N21°19'26"W
26.00'
PORTION OF EXISTING RETAINING WALL TO BE REMOVED
EXISTING GUIDE RAIL & FENCE TO BE REMOVED (TYP.)
SB–4/GW–3
SV–2
Shed
Deed L.6866, P.336 Parcel 2
Deed L.6866, P.336 Parcel 1
DI
Rim: 499.6
Inv: 493.9 12"PVC
EXISTING DRAIN INLET AND PORTION OF EXISTING DRAIN PIPE TO BE REMOVED
VILLAGE FOOD WASTE RECYCLING SHED TO BE RELOCATED TO ANOTHER LOCATION BY VILLAGE
Part of Tax Lot 79.17–1–5
Liber 6866, Page 336
Area = 0.5217 Acres
(Not including area within Lease Area)
EXISTING UTILITY POLE & SIGNS TO BE REMOVED (TYP.)
N68°10'44"E
72.01'
Deed: 71.97'
S18°50'56"E
67.67'
Deed: 67.93'
149.39'
S36°57'06"E
Jersey Barriers
Asphalt Curb
Asphalt Sidewalk
Chain Link Fence
N/F
N.Y.S. Department of Public Works
Former Benedict Boulevard line per Filed Map #1776
#24 20"PN DEAD
#25 10"OA
#26 18"OA
#27 6"PN
#28 6"PN
#29 4"MA
#30 4"OA
#31 28"OA
#32 10"MA
#33 6"TR
#34 32"OA
EXISTING DRAIN INLET & DRAINAGE PIPE TO BE REMOVED
DI
Rim: 498.9
Inv: 494.0
18"RCP
EXISTING STEPS TO BE REMOVED
S21°20'16"E 32.63'
25.60'
SV–4
SB–11/GW–4
S30°05'36"E
109.46'
64.90'
Part of Liber 7034, Page 544
S21°20'16"E 43.79'
Approximate Location of 2,000 Gallon Septic Tank to be Pumped and Removed in Accordance with WCDOH Requirements
S59°54'34"W
10.00'
N21°20'16"W
166.41'
Ingress & Egress Easement
Liber 7467, Page 623
10.08'
Ease. 50.00'
71.78'
S21°20'16"E
95.10'
Concrete Curb
N57°11'06"E
41.05'
51.13'
S56°11'46"W
N33°48'14"W
Approximate Location of Existing Sewer Forcemain (Typ.)
EXISTING PATIO AREA TO BE REMOVED
S56°20'41"W
40.70'
Road line based on Control #590323381
Steps
1 Story Building
Tax Lot 79.17–1–4
(Parcel I BTA83041)
Area = 0.2884 Acres
EXISTING WATER SERVICE TO BE ABANDONED (SEE REMOVAL NOTE 12)
Stone Ret Wall
Patio
Wood Ties
SB–10
EXISTING CURBS & PAVEMENT TO BE REMOVED
EXISTING BUILDINGS, DECK, WALK & STEPS TO BE REMOVED
SB–9
S59°54'34"W
84.90'
74.90'
2 Story Building
Deck
2 Story Building
Wood Curb
SB–7
SB–6
Tax Lot 79.17–1–3
(Parcel II BTA83041)
Area = 0.2205 Acres
Asphalt Parking Area
S56°38'31"W
31.22'
EXISTING ELECTRIC MANHOLE (SEE REMOVAL NOTE 13)
N33°03'47"W
0.50'
S57°03'52"W
13.09'
CB
Rim: 496.5
Inv: 490.2
DI
Rim: 493.6
Inv: 488.2(a)
Inv: 488.4(b)
Inv: 487.8(c)
24"RCP
S33°00'36"E
131.58'
Existing Chainlink Fence to Remain
Approximate Location of 9'x16' Metal Seepage Tank to be Pumped and Removed in Accordance with WCDOH Requirements
Approximate Location of 10'X10' Deep Metal Seepage Pit to be Pumped and Removed in Accordance with WCDOH Requirements
SV–3
SB–8
S33°00'36"E
167.12'
Restricted Access per
Liber 6609, Page 131
#1 #2 12"SU
#3 32&18"TR
#4 16_4"SU
#5 TRIP10"TR
#6 10"MA
#7 20"TR
#8 16"PE
#9 6"PE
#10 TW–4"PE
#11 20"AS
#12 20"PE
#13 12"SU
#14 4"PE
#15 22"PE
#16 10"PE
#17 16"MA
#18 16"PE
#19 18"MA
#20 10"PE
#21 12"PE
#22 12"MA
#23 12"SY
N.Y.S. Route 9 (Exit Ramp)

LEGEND

- EXISTING PROPERTY LINE
- EXISTING EASEMENT
- EXISTING GUIDE RAIL
- EXISTING CHAIN LINK FENCE
- EXISTING POST & RAIL FENCE
- EXISTING CURB
- EXISTING SIGN
- Guy UP — EXISTING UTILITY POLE WITH GUY WIRE
- TSP — EXISTING TRAFFIC SIGNAL POLE WITH ARM
- LP — EXISTING LIGHT POLE
- TSB — EXISTING TRAFFIC SIGNAL BOX
- EXISTING UNDERGROUND DRAINAGE PIPE
- EXISTING CATCH BASIN
- W — EXISTING WATER VALVE
- G — EXISTING GAS VALVE
- EXISTING BUILDING TO BE REMOVED
- ✕ ✕ EXISTING TREE TO BE REMOVED

SOILS LEGEND

SOILS	DESCRIPTION	HYDROLOGICAL GROUP
Ub Uf	Udorthents, smoothed Urban Land	B
▬ ▪ ▬ ▪ ▬	NRCS Soil Boundary Line	

GENERAL NOTES:

1. Location of existing sewer force main shown hereon along Croton Point Avenue is approximate and obtained from a drawing titled "Croton Point Landfill Leachate Collection System" prepared by Gibbs & Hill Inc., dated May 10th, 1991, and is shown in design location.
2. Location of existing water service shown hereon in Metro North Rail–Road Easement is approximate and obtained from a survey titled "Boundary Survey North of Croton Station" prepared by Welsh Engineering & land Surveying, P.C., dated August 9, 2017.
3. See Utility Notes for contractor requirements on existing utility markout prior to construction.

REMOVAL NOTES

1. All existing utilities shall be marked out prior to the start of construction.
2. Prior to submitting the bid, the contractor shall visit the site and familiarize themselves with the site conditions and existing improvements to be removed.
3. The contractor shall provide all removals incidental and necessary to execute the work prescribed in the contract documents. All existing features specified to be removed shall be removed in their entirety unless otherwise authorized in writing by the owner or the project engineer.
4. These drawings are intended to show an overall Limit of Disturbance and general features to be removed. Not all features incidental to the general scope of the site work have been shown to be removed. The contractor shall be responsible for all removals within the limits of both above and below grade features, necessary for the construction of the site improvements shown hereon.
5. Refer to construction sequence for sequence of utility removal and replacement.
6. All underground utility piping (water, sewer, drainage conduits) shall be capped and abandoned in place. All abandoned pipes left in place shall be filled with controlled low strength material (CLSM) sealing both ends. Any exposed utility piping shall be cut and removed such that a minimum of 1' of soil cover is maintained on all pipes that are to be capped and abandoned in place.
7. All building materials shall be demolished and removed from the site.
8. Burying of any demolished building materials on site is prohibited. Building foundations may be crushed and abandoned, filled in and restored in accordance with the project specifications.
9. All septic tanks shall be located prior to the start of demolition. All septic tanks shall be pumped by a licensed septic effluent hauler and disposed of in accordance with all pertinent regulations. The tanks shall then be crushed and abandoned in place. Septic tanks also include grease traps, manholes, dosing tanks and chlorine contact tanks.
10. For any below grade slab or bottom of tank that is to be demolished and abandoned in place, the concrete shall be pulverized so that there are no pieces of concrete remaining that are larger than 3 ft by 3 ft.
11. Remove existing electrical wiring and conduit back to the source panel.
12. Corporation stop shall be closed, the service line removed, and the corporation stop capped.
13. Contractor shall coordinate with Con Edison to potentially use existing electric service to site as temporary power for construction, and further coordinate with Con Edison for permanent removal.

TREE LEGEND

- DECIDUOUS TREE
- ✳ EVERGREEN TREE

AS	ASH
BR	BIRCH
MA	MAPLE
OA	OAK
PN	PINE
PE	PEAR
SP	SPRUCE
SU	SUMAC
SY	SYCAMORE
TR	UNKNOWN SPECIES
TW	TWIN
TRIP	TRIPLE

TREE TABLE

NO.	DESCRIPTION	REMOVE/ PRESERVE
1	12" BIRCH	PRESERVE
2	12" SUMAC	PRESERVE
3	32"&18" TREE	PRESERVE
4	16" SUMAC	PRESERVE
5	TRIPLE 10" TREE	PRESERVE
6	10" MAPLE	PRESERVE
~~7~~	~~20" TREE~~	~~REMOVE~~
~~8~~	~~16" PEAR~~	~~REMOVE~~
~~9~~	~~6" PEAR~~	~~REMOVE~~
~~10~~	~~TWIN 4" PEAR~~	~~REMOVE~~
11	20" ASPINE	PERSERVE
~~12~~	~~20" PEAR~~	~~REMOVE~~
13	12" SUMAC	PRESERVE
~~14~~	~~4" PEAR~~	~~REMOVE~~
~~15~~	~~22" PEAR~~	~~REMOVE~~
~~16~~	~~10" PEAR~~	~~REMOVE~~
17	16" MAPLE	PRESERVE
~~18~~	~~16" PEAR~~	~~REMOVE~~
19	18" MAPLE	PRESERVE
~~20~~	~~10" PEAR~~	~~REMOVE~~
~~21~~	~~12" PEAR~~	~~REMOVE~~
22	12" MAPLE	PRESERVE
~~23~~	~~12" SYCAMORE~~	~~REMOVE~~
24	20" PINE	PRESERVE
25	10" OAK	PRESERVE
26	18" OAK	PRESERVE
27	6" PINE	PRESERVE
28	6" PINE	PRESERVE
29	4" MAPLE	PRESERVE
30	4" OAK	PRESERVE
31	28" OAK	PRESERVE
32	10" MAPLE	PRESERVE
33	6" TREE	PRESERVE
34	32" OAK	PRESERVE

GRAPHIC SCALE
0 10 20 40
(IN FEET)
1 inch = 20 ft.

NO.	DATE	REVISION	BY
3	2–26–25	REVISED PER VILLAGE COMMENTS	NFB
2	9–24–24	REVISED PER VILLAGE COMMENTS	NFB
1	8–1–24	REVISED PER VILLAGE COMMENTS	TSM

INSITE
ENGINEERING, SURVEYING &
LANDSCAPE ARCHITECTURE, P.C.

3 Garrett Place
Carmel, NY 10512
(845) 225–9690
(845) 225–9717 fax
www.insite–eng.com

PROJECT:
1 CROTON POINT
CROTON POINT AVE. & VETERANS PLAZA, VILLAGE OF
CROTON–ON–HUDSON, WESTCHESTER CO., NY

DRAWING:
EXISTING CONDITIONS &
REMOVALS PLAN

RICHARD D. WILLIAMS JR.
085866

PROJECT NUMBER	24154.100	PROJECT MANAGER	R.D.W.
DATE	7–11–24	DRAWN BY	M.E.U.
SCALE	1" = 20'	CHECKED BY	D.L.M.

DRAWING NO.
EX–1

SHEET
2
10

ALTERATION OF THIS DOCUMENT, UNLESS UNDER THE DIRECTION OF A LICENSED PROFESSIONAL ENGINEER, IS A VIOLATION OF SECTION 7209 OF ARTICLE 145 OF THE EDUCATION LAW.

Z:\E\24154100 WBP Croton Point Ave\02 EX-1.dwg, 2/26/2025 10:14:53 AM, nblau, 1:1

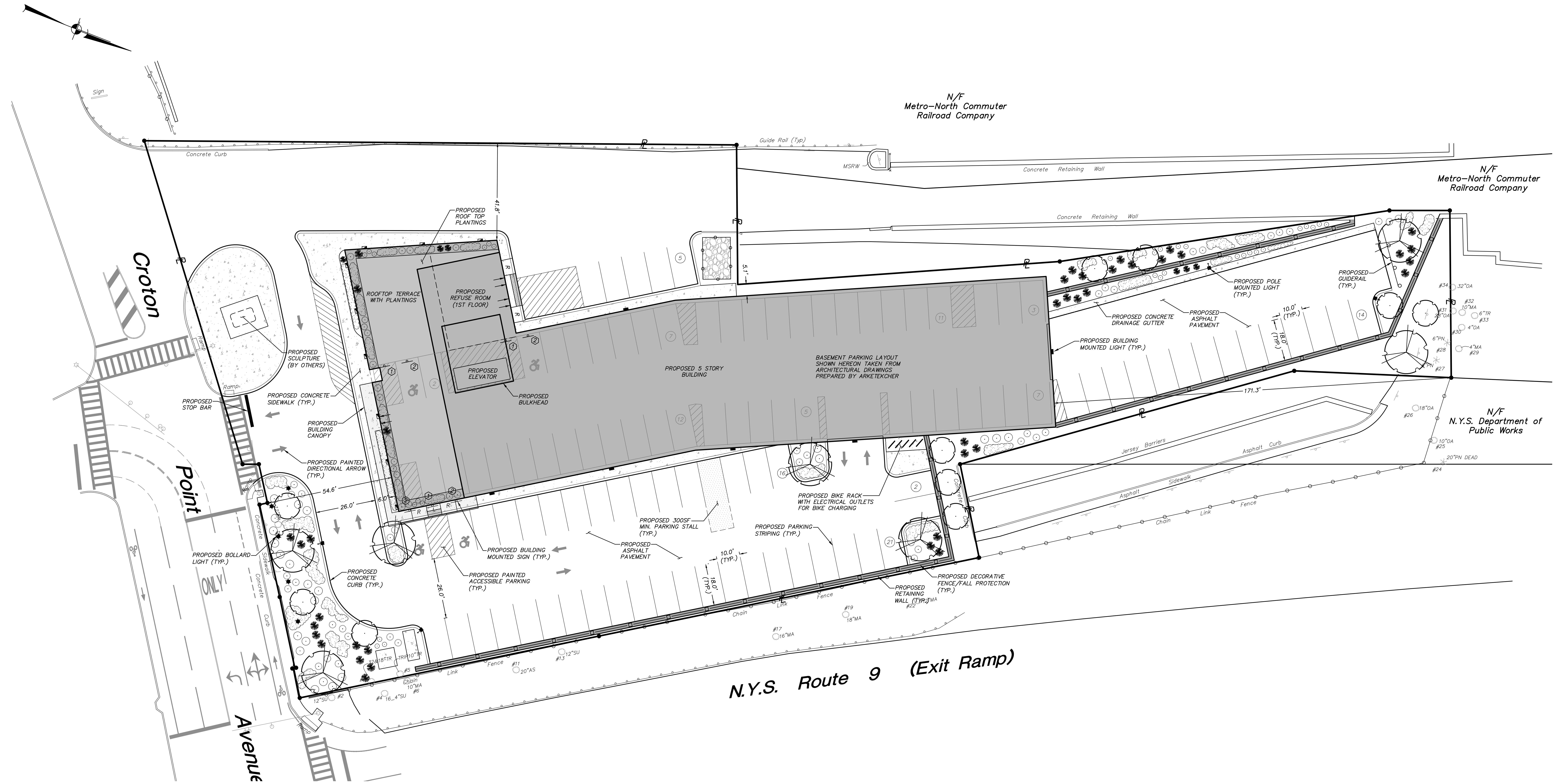
Sign
Concrete Curb
Guide Rail (Typ)
MSRW
Concrete Retaining Wall
N/F
Metro-North Commuter
Railroad Company
41.8'
PROPOSED ROOF TOP PLANTINGS
5.1'
Croton
Point
Avenue
Ramp
ROOFTOP TERRACE WITH PLANTINGS
PROPOSED REFUSE ROOM (1ST FLOOR)
PROPOSED ELEVATOR
PROPOSED BULKHEAD
PROPOSED SCULPTURE (BY OTHERS)
PROPOSED CONCRETE SIDEWALK (TYP.)
PROPOSED STOP BAR
PROPOSED BUILDING CANOPY
PROPOSED PAINTED DIRECTIONAL ARROW (TYP.)
54.6'
26.0'
6.0'
R
PROPOSED BOLLARD LIGHT (TYP.)
Concrete Sidewalk
Concrete Curb
ONLY
PROPOSED CONCRETE CURB (TYP.)
PROPOSED BUILDING MOUNTED SIGN (TYP.)
PROPOSED PAINTED ACCESSIBLE PARKING (TYP.)
26.0'
PROPOSED ASPHALT PAVEMENT
PROPOSED 5 STORY BUILDING
BASEMENT PARKING LAYOUT SHOWN HEREON TAKEN FROM ARCHITECTURAL DRAWINGS PREPARED BY ARKETEKCHER
PROPOSED 300SF MIN. PARKING STALL (TYP.)
PROPOSED PARKING STRIPING (TYP.)
10.0' (TYP.)
18.0' (TYP.)
PROPOSED BIKE RACK WITH ELECTRICAL OUTLETS FOR BIKE CHARGING
PROPOSED RETAINING WALL (TYP.)
PROPOSED DECORATIVE FENCE/FALL PROTECTION (TYP.)
Chain Link Fence
32&18"TR
TRIP10"TR
#1
12"SU #2
#4 16_4"SU
#5
10"MA #6
#11 20"AS
#13 12"SU
#17 16"MA
#19 18"MA
#22 12"MA
N.Y.S. Route 9 (Exit Ramp)
PROPOSED BUILDING MOUNTED LIGHT (TYP.)
PROPOSED CONCRETE DRAINAGE GUTTER
PROPOSED ASPHALT PAVEMENT
PROPOSED POLE MOUNTED LIGHT (TYP.)
PROPOSED GUIDERAIL (TYP.)
10.0' (TYP.)
18.0' (TYP.)
171.3'
#34 32"OA
#32 10"MA
#31 28"OA
6"TR #33
4"OA #30
6"PN #28
4"MA #29
6"PN #27
18"OA #26
10"OA #25
20"PN DEAD #24
Jersey Barriers
Asphalt Curb
Asphalt Sidewalk
Concrete Curb
N/F
N.Y.S. Department of
Public Works
1
2
3
5
7
11
12
14
16
21
GRAPHIC SCALE
0 10 20 40
(IN FEET)
1 inch = 20 ft.

LEGEND

℄	EXISTING PROPERTY LINE
—o—o—	EXISTING GUIDE RAIL
—○—○—	EXISTING CHAIN LINK FENCE
—\\—	EXISTING POST & RAIL FENCE
═	EXISTING CURB
—o—	EXISTING SIGN
	EXISTING TRAFFIC SIGNAL POLE WITH ARM
⑨	PROPOSED # OF STALLS TO BE STRIPED
═	PROPOSED CONCRETE CURB
—	PROPOSED EDGE OF SIDEWALK
▮▮▮▮	PROPOSED PAINTED CROSSWALK
▬	PROPOSED PAINTED STOPBAR
➡	PROPOSED PAINTED DIRECTIONAL ARROW
♿	PROPOSED PAINTED HANDICAP PARKING SYMBOL
▨	PROPOSED STRIPED ISLAND
⊠	PROPOSED LOADING SPACE
—o— ⬡1	PROPOSED SINGLE POLE SIGN
■-■	PROPOSED POLE MOUNTED LIGHT
—■—	PROPOSED BUILDING MOUNTED LIGHT
✷	PROPOSED POST MOUNTED LIGHT
→|	PROPOSED DOOR LOCATION
OHD	PROPOSED OVERHEAD DOOR LOCATION
○	PROPOSED LANDSCAPING

GENERAL PLANTING NOTES:

1. All proposed planting beds to receive a 12" min. depth of topsoil. Soil amendments and fertilizer application rates shall be determined based on specific testing of topsoil material.
2. Any new soils added will be amended as required by results of soil testing and placed using a method that will not cause compaction.
3. No fertilizer shall be added in stormwater basin plantings. Nutrient requirements to be met by incorporation of acceptable organic matter.
4. All plant material to be nursery grown.
5. Plants shall conform with ANSI Z60.1 American Standard for Nursery Stock in all ways including dimensions.
6. Plant material shall be taken from healthy nursery stock.
7. All plants shall be grown under climate conditions similar to those in the locality of the project.
8. Plants shall be planted in all locations designed on the plan or as staked in the field by the Landscape Architect.
9. The location and layout of landscape plants shown on the site plan shall take precedence in any discrepancies between the quantities of plants shown on the plans and the quantity of plants in the Plant List.
10. Provide a 3" layer of shredded pine bark mulch (or as specified) over entire watering saucer at all tree pits or over entire planting bed. Do not place mulch within 3" of tree or shrub trunks.
11. All landscape plantings shall be maintained in a healthy condition at all times. Any dead or diseased plants shall immediately be replaced "in kind" by the contractor (during warranty period) or project owner.

GENERAL SITE SEEDING NOTES:

1. All proposed seeded areas to receive 4" min. depth of topsoil. Soil amendments and fertilizer application rates shall be determined based on specific testing of topsoil material.
2. Upon final grading and placement of topsoil and any required soil amendments, areas to receive permanent vegetation cover in combination with suitable mulch as follows:
   - select seed mixture per drawings and seeding notes.
   - fertilizer applied at the manufacturer's recommended rate using Lesco 10–0–18 (no phosphorous) fertilizer or equivalent.
   - mulch: salt hay or small grain straw applied at a rate of 90 lbs./1000 s.f. or 2 tons/acre, to be applied and anchored according to New York State Standards and Specifications for Erosion and Sediment Control, August 2005.
   - if the season prevents the establishment of a permanent vegetation cover, the disturbed areas will be mulched with straw or equivalent.
3. The seed mixes as specified on these drawings are as follows:
   A. Seed Mix for lawn areas and mow strip along roads at a rate of 100 lbs. per acre:

Kentucky Bluegrass	20%
Creeping Red Fescue	40%
Perennial Ryegrass	20%
Annual Ryegrass	20%

   B. Seed Mix for Wildflower Meadow areas and SSTS area as shown on the drawings at a rate of 15 lbs. per acre:
      Low–Growing Wildflower & Grass Mix (ERNMX–156) from Ernst Conservation Seeds of Meadville, PA.

SITE PLANT SCHEDULE

	KEY	BOTANICAL/COMMON NAME	SIZE	ROOT/SPACING
		DECIDUOUS TREES		
	AR	Acer rubrum / Red Maple	3" – 3½" CAL.	B & B
	NS	Nyssa sylvatica / Black Tupelo	3" – 3½" CAL.	B & B
	QR	Quercus rubra / Northern Red Oak	3" – 3½" CAL.	B & B
		EVERGREEN TREES		
	IO	Ilex opaca / American Holly	6' HT.	B & B
	JV	Juniperus virginiana / Eastern Red Cedar	8' HT.	B & B
	TG	Thuja occidentalis / Green Giant Arborvitae	8' HT.	B & B
	TE	Thuja occidentalis / Emerald Green Aborvitae	6' HT.	B & B
		UNDERSTORY TREES		
	AC	Amelanchier x grandiflora / 'Autumn Brilliance' Serviceberry	1 1/2" CAL.	B & B
	CC	Cercis canadensis/ Eastern Redbud	1 1/2" CAL.	B & B
	MV	Magnolia virginiana / Sweetbay Magnolia	1 1/2" CAL.	B & B
		SHRUBS		
	CR	Cornus racemosa / Gray Dogwood	30" – 36" HT.	#5 CONT.
	HV	Hamamelis virginiana / Witchhazel	30" – 36" HT.	#5 CONT.
	HQ	Hydrangea quercifolia / Oakleaf Hydrangea	30" – 36" HT.	#5 CONT.
	IV	Ilex verticillata / Winterberry	18" – 24" HT.	#3 CONT.
	IG	Ilex glabra / Inkberry	18" – 24" HT.	#3 CONT.
	IT	Itea virginica / Virginia Sweetspire	18" – 24" HT.	#3 CONT.
		GROUNDCOVERS/GRASSES		
	An	Aster novae angliae / New England Aster	18" O.C.	#3 CONT.
	Ai	Asclepias incarnata / Swamp Milkweed	24" O.C.	#3 CONT.
	Ep	Echinacea purpurea / Coneflower	18" O.C.	#3 CONT.
	Iv	Iris versicolor / Blue Flag Iris	24" O.C.	#3 CONT.
	Sr	Solidago rugosa / Goldenrod	18" O.C.	#3 CONT.

ALTERATION OF THIS DOCUMENT, UNLESS UNDER THE DIRECTION OF A LICENSED PROFESSIONAL ENGINEER, IS A VIOLATION OF SECTION 7209 OF ARTICLE 145 OF THE EDUCATION LAW.

NO.	DATE	REVISION	BY
3	2-26-25	REVISED PER VILLAGE COMMENTS	NFB
2	9-24-24	REVISED PER VILLAGE COMMENTS	TSM
1	8-1-24	REVISED PER VILLAGE COMMENTS	TSM

INSITE
ENGINEERING, SURVEYING &
LANDSCAPE ARCHITECTURE, P.C.
3 Garrett Place
Carmel, NY 10512
(845) 225-9690
(845) 225-9717 fax
www.insite-eng.com

PROJECT:

1 CROTON POINT

CROTON POINT AVE. & VETERANS PLAZA, VILLAGE OF
CROTON-ON-HUDSON, WESTCHESTER CO., NY

DRAWING:

LAYOUT & LANDSCAPE PLAN

RICHARD D. WILLIAMS JR.
085866

PROJECT NUMBER	24154.100	PROJECT MANAGER	R.D.W.
DATE	7-11-24	DRAWN BY	M.E.U.
SCALE	1" = 20'	CHECKED BY	D.L.M.

DRAWING NO.
SP-1

SHEET
3/10

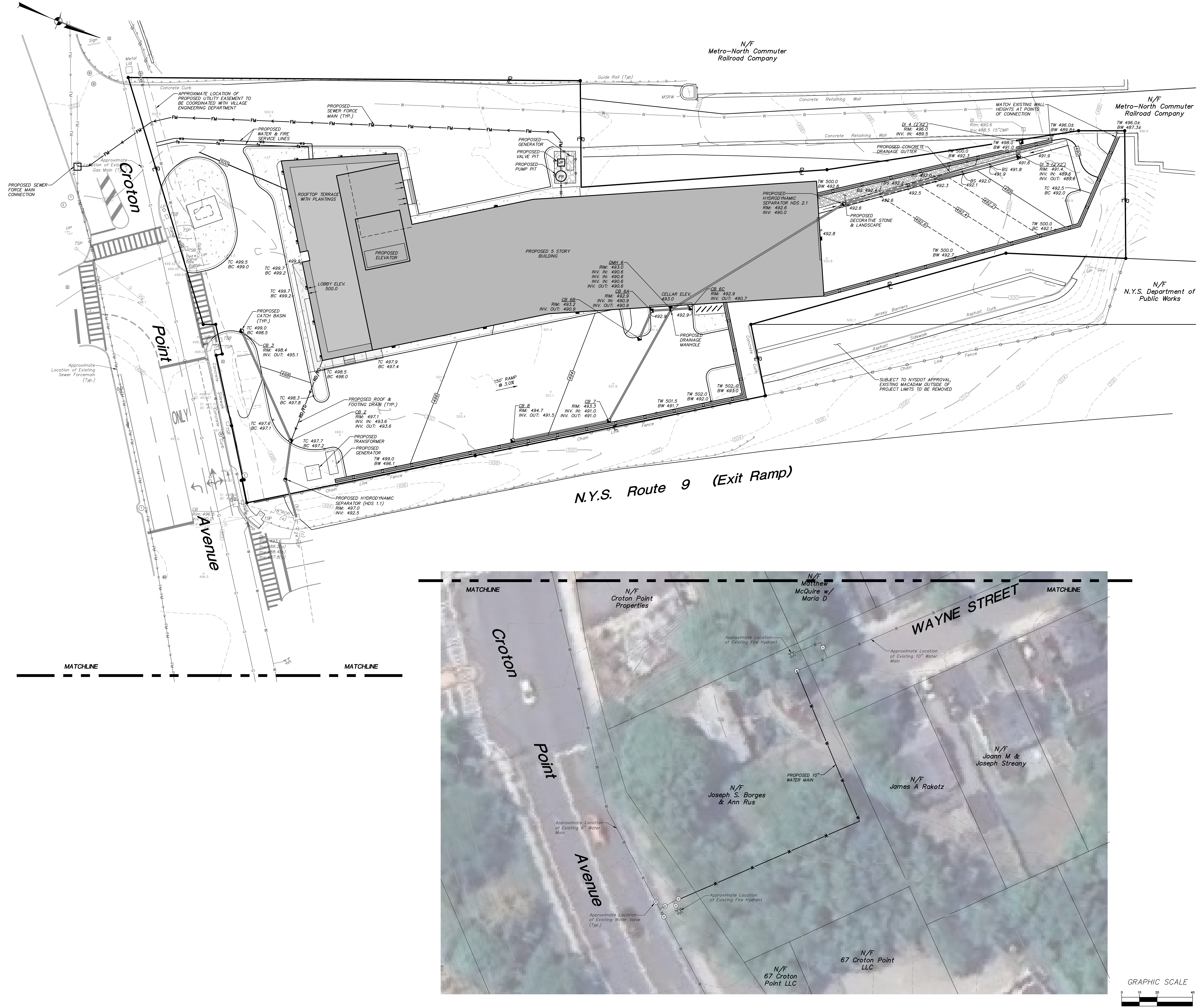
N/F
Metro-North Commuter
Railroad Company
Guide Rail (Typ)
MSRW
Concrete Retaining Wall
Sign
Metal Lid
Concrete Curb
APPROXIMATE LOCATION OF PROPOSED UTILITY EASEMENT TO BE COORDINATED WITH VILLAGE ENGINEERING DEPARTMENT
PROPOSED SEWER FORCE MAIN (TYP.)
PROPOSED WATER & FIRE SERVICE LINES
PROPOSED SEWER FORCE MAIN CONNECTION
Approximate Location of Existing Gas Main (Typ.)
Croton
Point
Avenue
ONLY
Approximate Location of Existing Sewer Forcemain (Typ.)
Ped Signal Pole
Ramp
TC 499.5
BC 499.0
ROOFTOP TERRACE WITH PLANTINGS
PROPOSED ELEVATOR
LOBBY ELEV. 500.0
TC 499.7
BC 499.2
499.9
PROPOSED CATCH BASIN (TYP.)
TC 499.0
BC 498.5
CB 3
RIM: 498.4
INV. OUT: 495.1
TC 497.9
BC 497.4
TC 498.5
BC 498.0
TC 498.3
BC 497.8
RD/FD
PROPOSED ROOF & FOOTING DRAIN (TYP.)
CB 2
RIM: 497.1
INV. IN: 493.6
INV. OUT: 493.6
TC 497.6
BC 497.1
TC 497.7
BC 497.2
PROPOSED TRANSFORMER
PROPOSED GENERATOR
TW 499.0
BW 496.1
PROPOSED HYDRODYNAMIC SEPARATOR (HDS 1.1)
RIM: 497.0
INV: 492.5
CB
Rim: 496.5
Inv: 490.2
DI
Rim: 493.6
Inv: 488.2(a)
Inv: 488.4(b)
Inv: 487.8(c)
18"RCP (a)
24"RCP (c)
(b)
Chain Link Fence
PROPOSED GENERATOR
PROPOSED VALVE PIT
PROPOSED PUMP PIT
VP
PP
PROPOSED 5 STORY BUILDING
DMH 6
RIM: 493.0
INV. IN: 490.6
INV. IN: 490.6
INV. IN: 490.6
INV. OUT: 490.6
CB 6A
RIM: 492.9
INV. IN: 490.9
INV. OUT: 490.9
CB 6B
RIM: 493.2
INV. OUT: 490.9
CELLAR ELEV. 493.0
CB 6C
RIM: 492.9
INV. OUT: 490.7
492.9
PROPOSED DRAINAGE MANHOLE
150' RAMP @ 3.0%
CB 8
RIM: 494.7
INV. OUT: 491.5
CB 7
RIM: 493.3
INV. IN: 491.0
INV. OUT: 491.0
TW 501.5
BW 491.7
TW 502.0
BW 492.0
TW 502.0
BW 493.0
Concrete Curb
N.Y.S. Route 9 (Exit Ramp)
PROPOSED HYDRODYNAMIC SEPARATOR HDS 2.1
RIM: 492.6
INV: 490.0
TW 500.0
BW 492.8
492.8
PROPOSED DECORATIVE STONE & LANDSCAPE
492.6
BS 492.4
TBS 492.2
492.5
BS 492.0
492.3
PROPOSED CONCRETE DRAINAGE GUTTER
TW 500.0
BW 492.3
TW 498.0
BW 491.0
DI 4 (2'X2')
RIM: 496.0
INV. IN: 489.5
DI
Rim: 490.6
Inv: 488.5 15"CMP
MATCH EXISTING WALL HEIGHTS AT POINTS OF CONNECTION
TW 496.0±
BW 489.8±
TW 496.0±
BW 487.3±
BS 492.0
492.1
BS 491.8
491.9
491.6
491.9
DI 5 (2'X2')
RIM: 491.4
INV. IN: 489.6
INV. OUT: 489.6
TC 492.5
BC 492.0
TW 500.0
BC 492.1
TW 500.0
BW 492.7
N/F
Metro-North Commuter
Railroad Company
N/F
N.Y.S. Department of
Public Works
Jersey Barriers
Asphalt Curb
Asphalt Sidewalk
Chain Link Fence
UP Guy
SUBJECT TO NYSDOT APPROVAL, EXISTING MACADAM OUTSIDE OF PROJECT LIMITS TO BE REMOVED
MATCHLINE
MATCHLINE
MATCHLINE
MATCHLINE
N/F
Croton Point
Properties
N/F
Matthew
McQuire w/
Maria D
WAYNE STREET
Approximate Location of Existing Fire Hydrant
Approximate Location of Existing 10" Water Main
PROPOSED 10" WATER MAIN
N/F
Joseph S. Borges
& Ann Rus
N/F
James A Rakotz
N/F
Joann M &
Joseph Streany
Approximate Location of Existing 6" Water Main
Approximate Location of Existing Fire Hydrant
Approximate Location of Existing Water Valve (Typ.)
N/F
67 Croton
Point LLC
N/F
67 Croton Point
LLC

GRAPHIC SCALE

0 10 20 40

(IN FEET)
1 inch = 20 ft.

ALTERATION OF THIS DOCUMENT, UNLESS UNDER THE DIRECTION OF A LICENSED PROFESSIONAL ENGINEER, IS A VIOLATION OF SECTION 7209 OF ARTICLE 145 OF THE EDUCATION LAW.

LEGEND

PL	EXISTING PROPERTY LINE
	EXISTING GUIDE RAIL
	EXISTING CHAIN LINK FENCE
	EXISTING POST & RAIL FENCE
	EXISTING CURB
	EXISTING SIGN
Guy UP	EXISTING UTILITY POLE WITH GUY WIRE
TSP	EXISTING TRAFFIC SIGNAL POLE WITH ARM
LP	EXISTING LIGHT POLE
☐ TSB	EXISTING TRAFFIC SIGNAL BOX
	EXISTING UNDERGROUND DRAINAGE PIPE
☐	EXISTING CATCH BASIN
W	EXISTING WATER VALVE
G	EXISTING GAS VALVE
490	PROPOSED 10' CONTOUR
	PROPOSED 2' CONTOUR
×489.9 489.9	PROPOSED SPOT ELEVATION
TC 489.9 ×BC 489.4	PROPOSED TOP OF CURB & BOTTOM OF CURB ELEVATIONS
●	PROPOSED SEWER MANHOLE
◐	PROPOSED DRAINAGE MANHOLE
◪	PROPOSED CATCH BASIN
☒	PROPOSED OUTLET STRUCTURE
◁	PROPOSED END SECTION
⊗ GV	PROPOSED WATER GATE VALVE
	PROPOSED FIRE HYDRANT
	PROPOSED DRAINAGE PIPE
FM	PROPOSED SEWER FORCE MAIN
SS	PROPOSED SEWER SERVICE LINE
fs	PROPOSED FIRE SERVICE LINE
ws	PROPOSED DOMESTIC WATER SERVICE LINE
	PROPOSED GRASS SWALE
PTD	PITCH TO DRAIN
●CO	PROPOSED CLEAN OUT

UTILITY NOTES:

1. The locations of existing utilities, water, sewers, and drainage structures have been indicated based on the best available information. It is possible that the actual subsurface utilities and piping may vary from that indicated. Therefore, prior to starting work in any area, the contractor shall take the necessary steps to determine the locations of all existing underground piping, conduit and structures. This shall include the contractor scheduling a special onsite utility markout with 'Call Before You Dig', and test pits at all utility crossings and points of connection to existing utilities. The contractor shall carry out their operations in such a manner as to prevent interference with lines which are to remain. Any pipe or conduit disturbed in the course of contract shall be repaired by the contractor at no extra cost to the owner.
2. Existing utility locations, sizes and elevations to be verified by contractor prior to the start of construction and any discrepancies reported to the project engineer immediately.
3. Whenever a connection to an existing pipe or structure is shown, the contractor shall confirm existing pipe materials of construction, dimensions, and connection requirement prior to submitting materials for approval.
4. When structures are to be placed on existing utility lines or where the proposed utility lines are assume to cross existing utilities, the contractor shall locate the existing utility and shall verify its existing invert elevation. The contractor shall notify the engineer if different utility invert elevations or locations are revealed by field exploration.
5. Where interference with other utilities or construction are encountered during construction of new utility lines, the contractor may adjust the alignment or invert elevations of that system only at the direction of the project engineer.
6. All existing utilities shall be removed to the main unless otherwise permitted by the utility service provider.
7. It shall be the contractor's responsibility to locate all overhead wires and utility poles, if any, in the vicinity of the proposed work. Furthermore, it is the contractor's responsibility to make the necessary arrangements to perform the work in the vicinity of these overhead wires.
8. The contractor shall exercise extreme caution when working adjacent to active power and communication lines to prevent damage to these lines. The contractor shall hand excavate test pits to expose those lines prior to performing any other excavation work in the area. The contractor shall repair at their expense, any power or communication interruption immediately.
9. Should any utility poles require bracing or relocating to accomplish the proposed work, it shall be the contractor's responsibility to make the appropriate arrangements to properly secure or relocate such utility poles. The contractor will not receive any additional payment for utility pole bracing or relocating. The contractor must include any costs for such work within their bid submittal.
10. The location of the proposed electric and gas service lines for the property are approximate and subject to the utility company design. The contractor shall coordinate with the owner and utility service provider(s) to determine the location of the site's electric and gas service connections. The contractor shall be responsible for obtaining all required permits necessary for the installation of utility connections, and shall provide electric service lines to each light in accordance with the owner's direction, manufacturer's specifications, and applicable electric code.
11. The gas, electric and communication utilities shall be installed in accordance with the utility provider specifications including but not limited to provided the proper bedding, cover, and detectable warning tape / tracer wire.
12. All sewer manhole pipe penetrations shall be provided with a waterproof rubber boot and gasket.
13. Cuts and fills are proposed over existing utilities. Site contractor shall protect all utilities whether shown or not shown during earthwork operations. Site contractor shall lower existing utilities as required to maintain adequate cover and adjust access and covers for existing structures to proposed grade.
14. Site contractor shall be responsible for trenching and backfill of electrical (including lighting) and communication conduits, including bedding materials. See electrical drawings for trench details. Electrical contractor shall be responsible for installation of conduit and wiring. Site contractor shall be responsible for setting light pole bases. Electrical contractor shall be responsible for setting light poles, conduit and wiring. Site contractor shall be responsible for installation of transformer pads. Electrical contractor shall be responsible for installation of conduits, transformers and wiring.

NO.	DATE	REVISION	BY
3	2-26-25	REVISED PER VILLAGE COMMENTS	NFB
2	9-24-24	REVISED PER VILLAGE COMMENTS	NFB
1	8-1-24	REVISED PER VILLAGE COMMENTS	TSM

I N S I T E
ENGINEERING, SURVEYING &
LANDSCAPE ARCHITECTURE, P.C.
3 Garrett Place
Carmel, NY 10512
(845) 225-9690
(845) 225-9717 fax
www.insite-eng.com

PROJECT:

1 CROTON POINT

CROTON POINT AVE. & VETERANS PLAZA, VILLAGE OF
CROTON-ON-HUDSON, WESTCHESTER CO., NY

DRAWING:

GRADING & UTILITIES PLAN

RICHARD D. WILLIAMS JR.
085866
LICENSED PROFESSIONAL ENGINEER

PROJECT NUMBER	24154.100	PROJECT MANAGER	R.D.W.
DATE	7-11-24	DRAWN BY	M.E.U.
SCALE	1" = 20'	CHECKED BY	D.L.M.

DRAWING NO.
SP-2

SHEET
4/10

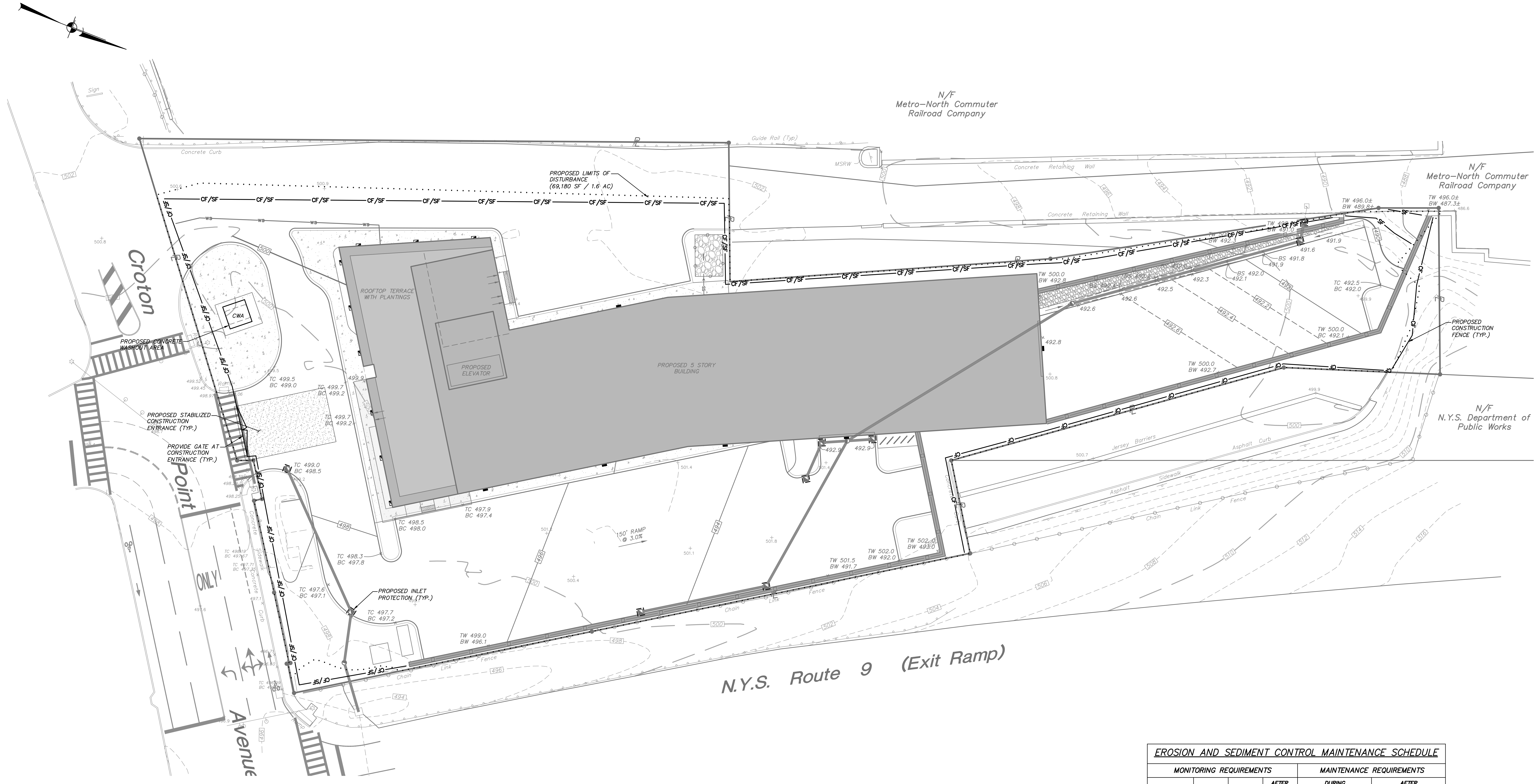

LEGEND

- EXISTING PROPERTY LINE
- EXISTING GUIDE RAIL
- EXISTING CHAIN LINK FENCE
- EXISTING POST & RAIL FENCE
- EXISTING CURB
- EXISTING SIGN
- EXISTING UNDERGROUND DRAINAGE PIPE
- EXISTING CATCH BASIN
- SF PROPOSED SILT FENCE
- PROPOSED LIMITS OF DISTURBANCE
- TSS SF PROPOSED TEMPORARY SOIL STOCKPILE
- PROPOSED STABILIZED CONSTRUCTION ENTRANCE
- PROPOSED DRAINAGE STRUCTURE W/ INLET PROTECTION

REQUIRED EROSION CONTROL SWPPP CONTENTS:

Pursuant to the NYSDEC "SPDES General Permit for Stormwater Discharges from Construction Activity" (GP–0–20–001), all Stormwater Pollution Prevention Plan's (SWPPP) shall include erosion and sediment control practices designed in conformance with the most current version of the technical standard, "New York Standards and Specifications for Erosion and Sediment Control." Where erosion and sediment control practices are not designed in conformance with this technical standard, the owner or operator must demonstrate equivalence to the technical standard. The following list of required SWPPP components is provided in accordance with Part III.B.1a–l of General Permit GP–0–20–001:

a. Background Information: The subject project consists of the construction of a 100 Unit affordable condominium building.

b. Site map / construction drawing: These plans serve to satisfy this SWPPP requirement.

c. Description of the soils present at the site: Onsite soils located within the proposed limits of disturbance consist of Urban land (Uf), Urban land–Riverhead complex (UvC), and Udorthents, smoothed (Ub), as identified on the Soil Conservation Service Web Soil Survey. These soil types belong to the Hydrologic Soil Group "B" and "D."

d. Construction phasing plan / sequence of operations: The Construction Sequence and phasing found on these plans provide the required phasing. A Construction Sequence and Erosion and Sediment Control Maintenance Schedule has been provided. The Erosion and Sediment Control Notes contained hereon outline a general sequence of operations for the proposed project. In general all erosion and sediment control facilities shall be installed prior to commencement with land disturbing activities, and areas of disturbance shall be limited to the shortest period of time as practicable.

e. Description of erosion and sediment control practices: This plan, and details / notes shown hereon serve to satisfy this SWPPP requirement.

f. Temporary and permanent soil stabilization plan: The Sedimentation and Erosion Control Notes and Details provided heron identify temporary and permanent stabilization measures to be employed with respect to specific elements of the project, and at the various stages of development.

g. Site map / construction drawing: This plan serves to satisfy this SWPPP requirement.

h. The dimensions, material specifications, installation details, and operation and maintenance requirements for all erosion and sediment control practices: The details, Erosion and Sediment Control Notes, and Erosion and Sediment Control Maintenance Schedule serve to satisfy this SWPPP requirement.

i. An inspection schedule: Inspections are to be performed twice weekly and by a qualified professional as required by the General Permit GP–0–20–001. In addition the NYSDEC Trained Contractor shall perform additional inspections as cited in the Sedimentation and Erosion Control Notes.

j. A description of pollution prevention measures that will be used to control litter, construction chemicals and construction debris: In general, all construction litter / debris shall be collected and removed from the site. The general contractor shall supply either waste barrels or dumpster for proper waste disposal. Any construction chemicals utilized during construction shall either be removed from site daily by the contractor or stored in a structurally sound and weatherproof building. No hazardous waste shall be disposed of onsite, and shall ultimately be disposed of in accordance with all federal, state and local regulations. Material Safety Data Sheets (MSDS), material inventory, and emergency contact numbers shall be maintained by the general contractor for all construction chemicals utilized onsite. Finally, temporary sanitary facilities (portable toilets) shall be provided onsite during the entire length of construction, and inspected weekly for evidence of leaking holding tanks.

k. A description and location of any stormwater discharges associated with industrial activity other than construction at the site: There are no known industrial stormwater discharges present or proposed at the site.

l. Identification of any elements of the design that are not in conformance with the technical standard, "New York Standards and Specifications for Erosion and Sediment Control." All proposed elements of this SWPPP have been designed in accordance with the "New York Standards and Specifications for Erosion and Sediment Control."

ALTERATION OF THIS DOCUMENT, UNLESS UNDER THE DIRECTION OF A LICENSED PROFESSIONAL ENGINEER, IS A VIOLATION OF SECTION 7209 OF ARTICLE 145 OF THE EDUCATION LAW.

REQUIRED POST–CONSTRUCTION STORMWATER MANAGEMENT PRACTICE COMPONENTS:

1. Pursuant to the NYSDEC "SPDES General Permit for Stormwater Discharges from Construction Activity" (GP–0–20–001), all construction projects needing post–construction stormwater management practices shall prepare a SWPPP that also includes practices designed in conformance with the most current version of the technical standard, New York State Stormwater Management Design Manual ("Design Manual"). Where post–construction stormwater management practices are not designed in conformance with this technical standard, the owner or operator must demonstrate equivalence to the technical standard. The following list of SWPPP components is provided in accordance with Part III.B.2a–f and III.B.3:

   a. Identification of all post–construction stormwater management practices to be constructed as part of the project; This plan, and details/notes shown hereon serve to satisfy this SWPPP requirement.

   b. A site map/construction drawing(s) showing the specific location and size of each post–construction stormwater management practice; This plan, and details/notes shown hereon serve to satisfy this SWPPP requirement.

   c. A Stormwater Modeling and Analysis Report including pre–development conditions, post–development conditions, the results of the stormwater modeling, a summary table demonstrating that each practice has been designed in conformance with the sizing criteria, identification of and justification for any deviations from the Design Manual, and identification of any design criteria that are not required. The required analysis is provided in the report titled Stormwater Pollution Prevention Plan for 1 Croton Point.

   d. An operations and maintenance plan that includes inspection and maintenance schedules and actions to ensure continuous and effective operation of each post–construction stormwater management practice. The plan shall identify the entity that will be responsible for the long term operation and maintenance of each practice. The Permanent Stormwater Facilities Maintenance Schedule provided on these plans serves to satisfy this requirement.

2. Enhanced Phosphorus Removal Standards – Beginning on September 30, 2008, all construction projects identified in Table 2 of Appendix B that are located in the watersheds identified in Appendix C shall prepare a SWPPP that includes post–construction stormwater management practices designed in conformance with the Enhanced Phosphorus Removal Standards included in the most current version of the technical standard, New York Stormwater Management Design Manual. At a minimum, the post–construction stormwater management practice component of the SWPPP shall include items 2.a – 2.f above. This requirement is not applicable as the project is not located in the watersheds identified in Appendix C.

CONSTRUCTION SEQUENCE:

1. A pre–construction meeting shall be scheduled with the project architect project engineer and Westchester County before the start of construction activities.
2. Per New York State Law, the contractor shall call DigSafely New York at 1–800–962–7962 two (2) full days prior to performing any excavation work.
3. At the start of construction activities, the infiltration area must be cordoned off to protect it from construction activities on–site.
4. Install stabilized construction entrance/anti–tracking pad as shown on the plan.
5. Install silt fence and other erosion control measures as shown on this plan. Strip and stockpile topsoil on site, as construction progresses for later use, in lawn and landscape areas.
6. Begin site demolition, clearing & grubbing operations associated with the project.
7. Begin excavation for building foundations.
8. Install drainage structures and associated piping.
9. Begin site grading operations for parking and driveways.
10. Install remaining utility work (water and sewer) and connect Roof Leader Drains to drainage system. Inlet Protection shall be installed on all catch basins, drain inlets and yard drains. The inlet protection shall remain installed until all disturbed areas which drain to them are stabilized.
11. Complete final grading operations, site work, and finished surfaces. Upon completion of grading operations, install finished driveway surfaces.
12. Topsoil, seed, and mulch all disturbed areas the same day they are disturbance in accordance with the Erosion and Sediment Control Notes (Note #7). Permanent Stabilization is achieved when 80% of the plant/grass density is established.
13. Once permanent final stabilization (80% of plant/grass density has been established) of all disturbed areas has been achieved, remove all temporary erosion and sediment controls.

EROSION AND SEDIMENT CONTROL MAINTENANCE SCHEDULE

MONITORING REQUIREMENTS				MAINTENANCE REQUIREMENTS	
PRACTICE	**DAILY**	**WEEKLY**	**AFTER RAINFALL**	**DURING CONSTRUCTION**	**AFTER CONSTRUCTION**
SILT FENCE BARRIER	–	Inspect	Inspect	Clean/Replace	Remove
STABILIZED CONSTRUCTION ENTRANCE	Inspect	–	Inspect	Clean/Replace Stone and Fabric	Remove
INLET PROTECTION	–	Inspect	Inspect	Clean/Repair/ Replace	Remove
DUST CONTROL	Inspect	–	Inspect	Mulching/ Spraying Water	N/A
*VEGETATIVE ESTABLISHMENT	–	Inspect	Inspect	Water/Reseed/ Remulch	Reseed to 80% Coverage
SOIL STOCKPILES	–	Inspect	Inspect	Mulching/ Silt Fence Repair	Remove
SWALES	–	Inspect	Inspect	Clean/Mulch/ Repair	Mow Permanent Grass/Replace/ Repair Rip Rap
CONCRETE DRAINAGE STRUCTURES	–	Inspect	Inspect	Clean Sumps/ Remove Debris/ Repair/Replace	See Permanent Stormwater Facilities Maintenance Schedule on Drawing D–10
DRAINAGE PIPES	–	Inspect	Inspect	Clean/Repair	
ACCESS ROAD / PAVEMENT	–	Inspect	Inspect	Clean	Clean
HYDRODYNAMIC SEPARATOR	–	Inspect	Inspect	Clean per Manufacturer Specification	See Permanent Stormwater Facilities Maintenance Schedule on Drawing D–10

* Permanent vegetation is considered stabilized when 80% of the plant density is established.
Erosion control measures shall remain in place until all disturbed areas area permanently stabilized.

EROSION & SEDIMENT CONTROL NOTES:

1. The owner's field representative (O.F.R.) will be responsible for the implementation and maintenance of erosion and sediment control measures on this site prior to and during construction.
2. All construction activities involving the removal or disposition of soil are to be provided with appropriate protective measures to minimize erosion and contain sediment disposition within. Minimum soil erosion and sediment control measures shall be implemented as shown on the plans and shall be installed in accordance with "New York Standards and Specifications For Erosion and Sediment Control," latest edition.
3. Wherever feasible, natural vegetation should be retained and protected. Disturbance shall be minimized in the areas required to perform construction. No more than 5 acres of unprotected soil shall be exposed at any one time.
4. When land is exposed during development, the exposure shall be kept to the shortest practical period of time. In the areas where soil disturbance activity has temporarily or permanently ceased, the application of soil stabilization measures must be initiated by the end of the next business day and completed within fourteen (14) days from the date the current soil disturbance activity ceased. Disturbance shall be minimized to the areas required to perform construction.
5. Silt fence shall be installed as shown on the plans prior to beginning any clearing, grubbing or earthwork.
6. All topsoil to be stripped from the area being developed shall be stockpiled and immediately seeded for temporary stabilization. Ryegrass (annual or perennial) at a rate of 30 lbs. per acre shall be used for temporary seeding in spring, summer or early fall. 'Aristook' Winter Rye (cereal rye) shall be used for temporary seeding in late fall and winter.
7. Any disturbed areas not subject to further disturbance or construction traffic, permanent or temporary, shall have soil stabilization measures initiated for permanent vegetation cover in combination with a suitable mulch within 1 business day of final grading. All seeded areas to receive a minimum 4" topsoil (from stockpile area) and be seeded and mulched as follows:
   - Seed mixture to be planted between March 21 and May 20, or between August 15 and October 15 or as directed by project representative at a rate of 100 pounds per acre in the following proportions:

Kentucky Bluegrass	20%
Creeping Red Fescue	40%
Perennial Ryegrass	20%
Annual Ryegrass	20%

   - Mulch: Salt hay or small grain straw applied at a rate of 90 lbs./1000 S.F. or 2 tons/acre, to be applied and anchored according to "New York Standards and Specification For Erosion and Sediment Control," latest edition.
8. Grass seed mix may be applied by either mechanical or hydroseeding methods. Seeding shall be performed in accordance with the current edition of the "NYSDOT Standard Specification, Construction and Materials, Section 610–3.02, Method No. 1". Hydroseeding shall be performed using materials and methods as approved by the site engineer.
9. Cut or fill slopes steeper than 2:1 shall be stabilized immediately after grading with Curlex I Single Net Erosion Control Blanket, or approved equal.
10. Paved roadways shall be kept clean at all times.
11. The site shall at all times be graded and maintained such that all stormwater runoff is diverted to soil erosion and sediment control facilities.
12. All storm drainage outlets shall be stabilized, as required, before the discharge points become operational.
13. Stormwater from disturbed areas must be passed through erosion control barriers before discharge beyond disturbed areas or discharged into other drainage systems.
14. Erosion and sediment control measures shall be inspected and maintained on a daily basis by the O.F.R. to insure that channels, temporary and permanent ditches and pipes are clear of debris, that embankments and berms have not been breached and that all straw bales and silt fences are intact. Any failure of erosion and sediment control measures shall be immediately repaired by the contractor and inspected for approval by the O.F.R. and/or site engineer.
15. Dust shall be controlled by sprinkling or other approved methods as necessary, or as directed by the O.F.R.
16. Cut and fills shall not endanger adjoining property, nor divert water onto the property of others.
17. All fills shall be placed and compacted in 6" lifts to provide stability of material and to prevent settlement.
18. The O.F.R. shall inspect downstream conditions for evidence of sedimentation on a weekly basis and after rainstorms.
19. As warranted by field conditions, special additional erosion and sediment control measures, as specified by the site engineer and/or the Town Engineer shall be installed by the contractor.
20. Erosion and sediment control measures shall remain in place until all disturbed areas are suitably stabilized.

GRAPHIC SCALE

0 10 20 40

(IN FEET)
1 inch = 20 ft.

NO.	DATE	REVISION	BY
3	2–26–25	REVISED PER VILLAGE COMMENTS	NFB
2	9–24–24	REVISED PER VILLAGE COMMENTS	NFB
1	8–1–24	REVISED PER VILLAGE COMMENTS	TSM

INSITE
ENGINEERING, SURVEYING &
LANDSCAPE ARCHITECTURE, P.C.

3 Garrett Place
Carmel, NY 10512
(845) 225–9690
(845) 225–9717 fax
www.insite–eng.com

PROJECT:
1 CROTON POINT
CROTON POINT AVE. & VETERANS PLAZA, VILLAGE OF
CROTON–ON–HUDSON, WESTCHESTER CO., NY

DRAWING:
EROSION & SEDIMENT
CONTROLS PLAN

RICHARD D. WILLIAMS JR.
085866

PROJECT NUMBER	24154.100	PROJECT MANAGER	R.D.W.
DATE	7–11–24	DRAWN BY	M.E.U.
SCALE	1" = 20'	CHECKED BY	D.L.M.

DRAWING NO.
SP–3

SHEET
5
10

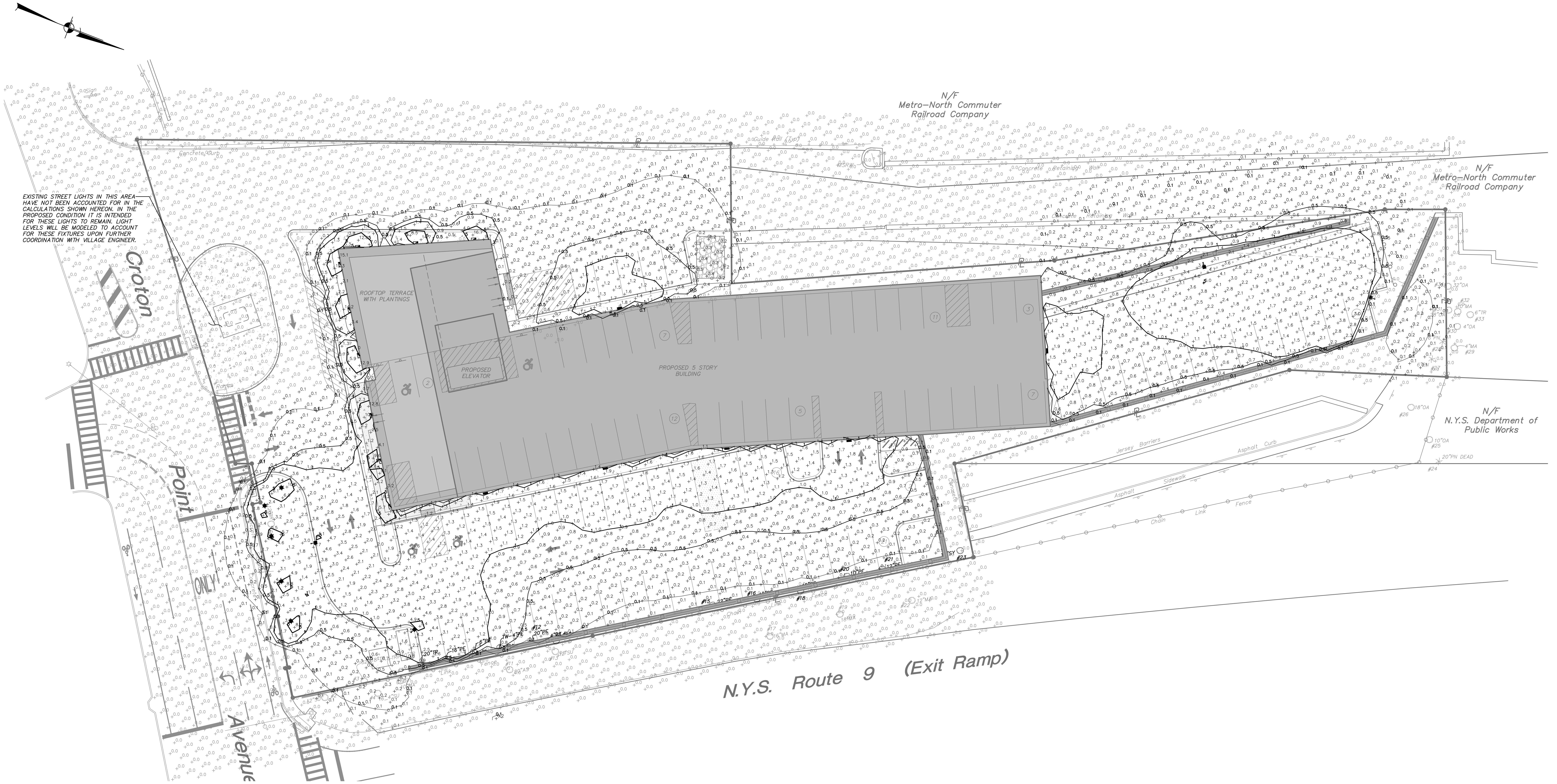

EXISTING STREET LIGHTS IN THIS AREA HAVE NOT BEEN ACCOUNTED FOR IN THE CALCULATIONS SHOWN HEREON. IN THE PROPOSED CONDITION IT IS INTENDED FOR THESE LIGHTS TO REMAIN. LIGHT LEVELS WILL BE MODELED TO ACCOUNT FOR THESE FIXTURES UPON FURTHER COORDINATION WITH VILLAGE ENGINEER.

LEGEND

EXISTING PROPERTY LINE
EXISTING GUIDE RAIL
EXISTING CHAIN LINK FENCE
EXISTING POST & RAIL FENCE
EXISTING CURB
EXISTING SIGN
EXISTING TRAFFIC SIGNAL POLE WITH ARM
PROPOSED # OF STALLS TO BE STRIPED
PROPOSED CONCRETE CURB
PROPOSED EDGE OF SIDEWALK
PROPOSED PAINTED CROSSWALK
PROPOSED PAINTED STOPBAR
PROPOSED PAINTED DIRECTIONAL ARROW
PROPOSED PAINTED HANDICAP PARKING SYMBOL
PROPOSED STRIPED ISLAND
PROPOSED LOADING SPACE
PROPOSED SINGLE POLE SIGN
PROPOSED POLE MOUNTED LIGHT
PROPOSED BUILDING MOUNTED LIGHT
PROPOSED POST MOUNTED LIGHT
PROPOSED DOOR LOCATION
PROPOSED OVERHEAD DOOR LOCATION
PROPOSED LANDSCAPING

LUMINAIRE SCHEDULE

Sym	Qty	Catalog Number	Description	Lamp	Mounting Height	Watts
A	6	PRV–P–PA1A–730 –U–T4W–HSS	Lumark Prevail Petite Wall Pack	LED	15'–0"	30.0
B	9	B 33 816	BEGA Lighting marine grade, low mounting path luminaire	LED	9'–0"	17.0
C	4	RSX1_LED_P1_30K_R4	RSX Pole Mounted Area Luminaire	LED	16'–0"	51.3
D	5	KBA8 LED 12C 350 30K ASY MVOLT	KBA8 with 3 Light Boards (12 LEDS), 350MA Driver, 2,700k Color Temp, and Asymmetric Optic	LED	3'–0"	16.0

LIGHTING NOTES:

1. All lighting shall be as noted on the plan or approved equal.
2. Calculation values shown in this plan are taken on a horizontal plane at ground level using a 0.98 light loss factor for LEDs. Topographical information and landscaping have not been accounted for in these calculations.
3. All lighting on this plan shall be directed and/or shielded so as to preclude objectionable glare from being observable from adjoining streets and properties.
4. Photometric modeling based on specified fixtures shown hereon.
5. Exterior lighting will automatically turn off during daylight hours. Exterior lighting will turn on between sunset and 6:00 AM.
6. Existing street lights along Croton Point Avenue have not been accounted for in the photometric calculations shown hereon. Any/all areas depicting reduced levels of light output along Croton Point Avenue will be illuminated by existing street lighting.

LIGHT CONTOUR LEGEND

Contour	Value
0.1	0.10 Foot Candles
0.5	0.50 Foot Candles
1	1.00 Foot Candles
5	5.00 Foot Candles

* Photometric calculations shown on plan are in foot candles.

ALTERATION OF THIS DOCUMENT, UNLESS UNDER THE DIRECTION OF A LICENSED PROFESSIONAL ENGINEER, IS A VIOLATION OF SECTION 7209 OF ARTICLE 145 OF THE EDUCATION LAW.

GRAPHIC SCALE
0 10 20 40
(IN FEET)
1 inch = 20 ft.

NO.	DATE	REVISION	BY
2	2–26–25	REVISED PER VILLAGE COMMENTS	NFB
1	9–24–24	REVISED PER VILLAGE COMMENTS	NFB

INSITE
ENGINEERING, SURVEYING &
LANDSCAPE ARCHITECTURE, P.C.

3 Garrett Place
Carmel, NY 10512
(845) 225–9690
(845) 225–9717 fax
www.insite–eng.com

PROJECT:
1 CROTON POINT
CROTON POINT AVE. & VETERANS PLAZA, VILLAGE OF CROTON–ON–HUDSON, WESTCHESTER CO., NY

DRAWING:
PHOTOMETRIC LIGHTING PLAN

RICHARD D. WILLIAMS JR.
085866

PROJECT NUMBER	24154.100	PROJECT MANAGER	R.D.W.
DATE	8–1–24	DRAWN BY	T.S.M.
SCALE	1" = 20'	CHECKED BY	D.L.M.

DRAWING NO.
LP–1

SHEET
6 / 10

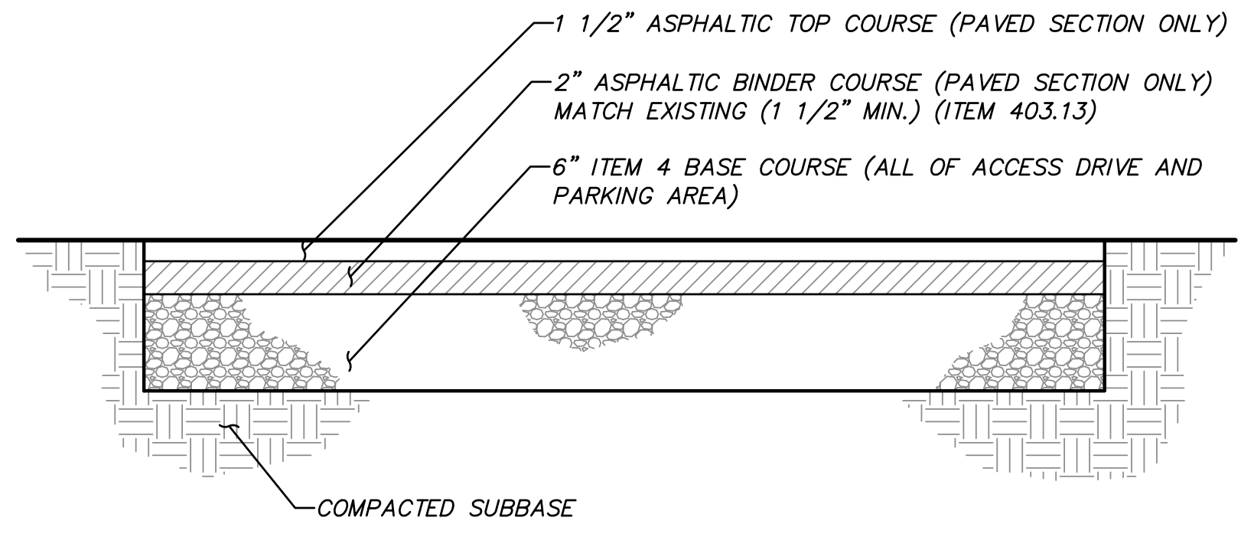
1 1/2" ASPHALTIC TOP COURSE (PAVED SECTION ONLY)
2" ASPHALTIC BINDER COURSE (PAVED SECTION ONLY) MATCH EXISTING (1 1/2" MIN.) (ITEM 403.13)
6" ITEM 4 BASE COURSE (ALL OF ACCESS DRIVE AND PARKING AREA)
COMPACTED SUBBASE

ASPHALT PAVEMENT DETAIL

(N.T.S.)

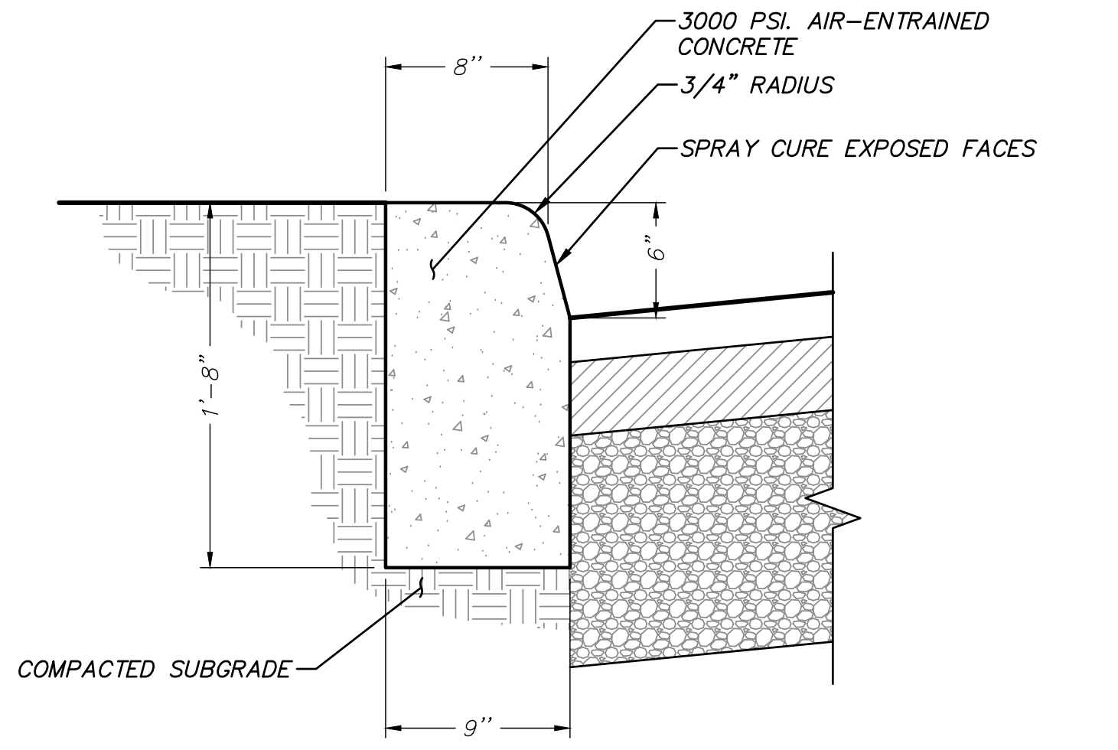
3000 PSI. AIR-ENTRAINED CONCRETE
3/4" RADIUS
SPRAY CURE EXPOSED FACES
8"
6"
1'-8"
9"
COMPACTED SUBGRADE

NOTE:
TRANSVERSE JOINTS 1/2" WIDE SHALL BE INSTALLED IN THE CURB 10'-0" APART AND SHALL BE FILLED WITH CELLULAR COMPRESSION MATERIALS AS SPECIFIED, RECESSED 1/4" IN FROM FRONT FACE AND TOP OF CURB.

CONCRETE CURB DETAIL

(N.T.S.)

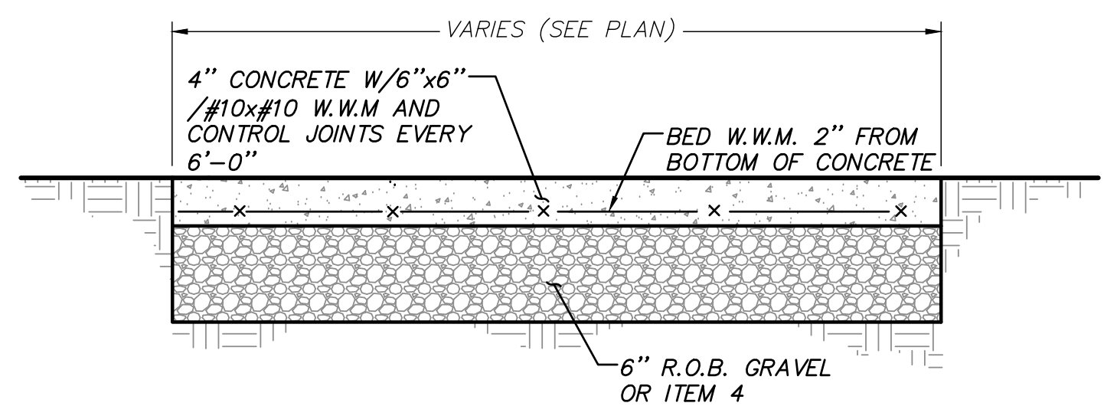
VARIES (SEE PLAN)
4" CONCRETE W/6"x6" /#10x#10 W.W.M AND CONTROL JOINTS EVERY 6'-0"
BED W.W.M. 2" FROM BOTTOM OF CONCRETE
6" R.O.B. GRAVEL OR ITEM 4

CONCRETE SIDEWALK DETAIL

(N.T.S.)

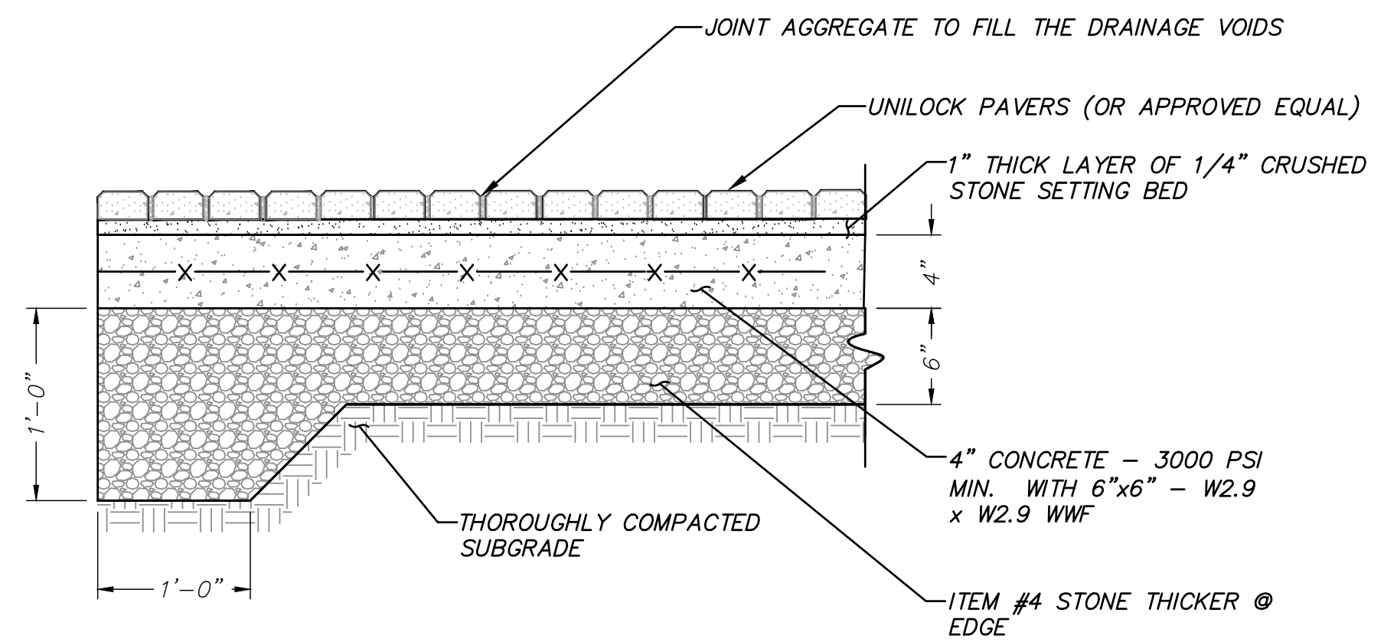
JOINT AGGREGATE TO FILL THE DRAINAGE VOIDS
UNILOCK PAVERS (OR APPROVED EQUAL)
1" THICK LAYER OF 1/4" CRUSHED STONE SETTING BED
4"
6"
1'-0"
4" CONCRETE – 3000 PSI MIN. WITH 6"x6" – W2.9 x W2.9 WWF
THOROUGHLY COMPACTED SUBGRADE
ITEM #4 STONE THICKER @ EDGE
1'-0"

NOTES:
1. Pavers to be unilock pavers 5"x10"x3 1/8" set in herringbone pattern.
2. Paver finish to be il campo. paver color to be as approved by owner.
3. Joint aggregate color to be coordinated with paver color.

PAVERS DETAIL

(N.T.S.)

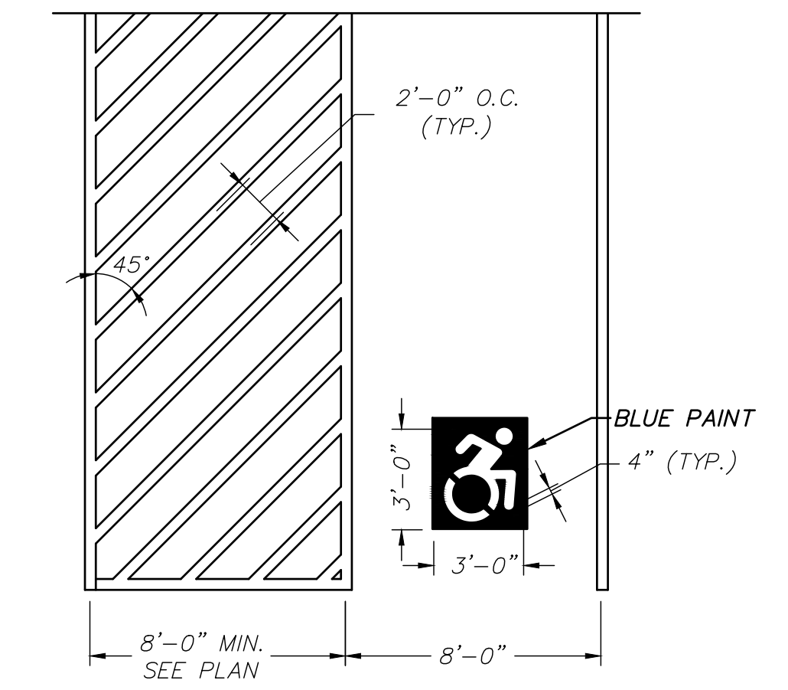
2'-0" O.C. (TYP.)
45°
BLUE PAINT
4" (TYP.)
3'-0"
3'-0"
8'-0" MIN. SEE PLAN
8'-0"

NOTE:
ALL HANDICAP STRIPING SHALL BE 4" WIDE BLUE PAINT.

PAINTED NYS ACCESSIBLE PARKING DETAIL

(N.T.S.)

ALTERATION OF THIS DOCUMENT, UNLESS UNDER THE DIRECTION OF A LICENSED PROFESSIONAL ENGINEER, IS A VIOLATION OF SECTION 7209 OF ARTICLE 145 OF THE EDUCATION LAW.

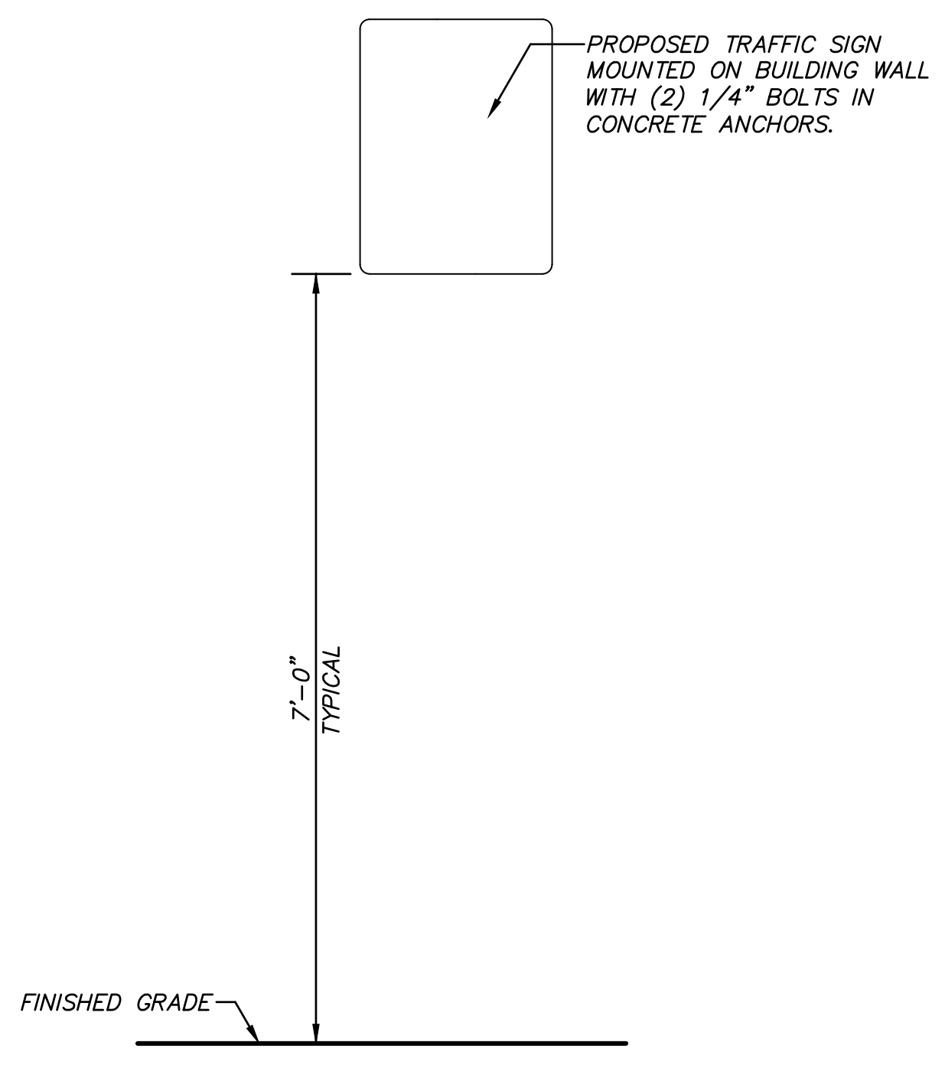
PROPOSED TRAFFIC SIGN MOUNTED ON BUILDING WALL WITH (2) 1/4" BOLTS IN CONCRETE ANCHORS.
7'-0" TYPICAL
FINISHED GRADE

NOTE: FOR HANDICAP PARKING SIGNAGE, SIGNS SHALL BE INSTALLED AT A CLEAR HEIGHT OF BETWEEN 5'-0" AND 7'-0" ABOVE GRADE OF PARKING SPACE AND SUCH THAT SIGNS SHALL NOT BE OBSCURED BY A VEHICLE PARKED IN THE SPACE.

BUILDING MOUNTED SIGN DETAIL

(N.T.S.)

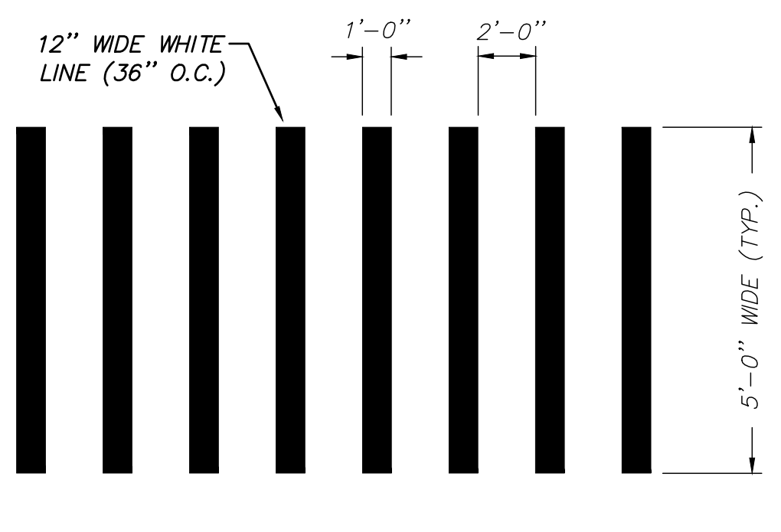
12" WIDE WHITE LINE (36" O.C.)
1'-0"
2'-0"
5'-0" WIDE (TYP.)

NOTE: INSTALLATION TO CONFORM WITH CURRENT NYSDOT STANDARDS AND SPECIFICATIONS

CROSSWALK MARKING DETAIL (TYPE 2)

(N.T.S.)

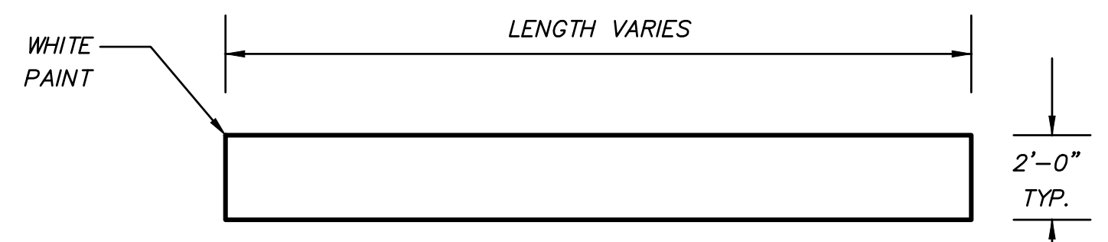
WHITE PAINT
LENGTH VARIES
2'-0" TYP.

NOTE: INSTALLATION TO CONFORM WITH CURRENT NYSDOT STANDARDS AND SPECIFICATIONS.

PAINTED STOP BAR DETAIL

(N.T.S.)

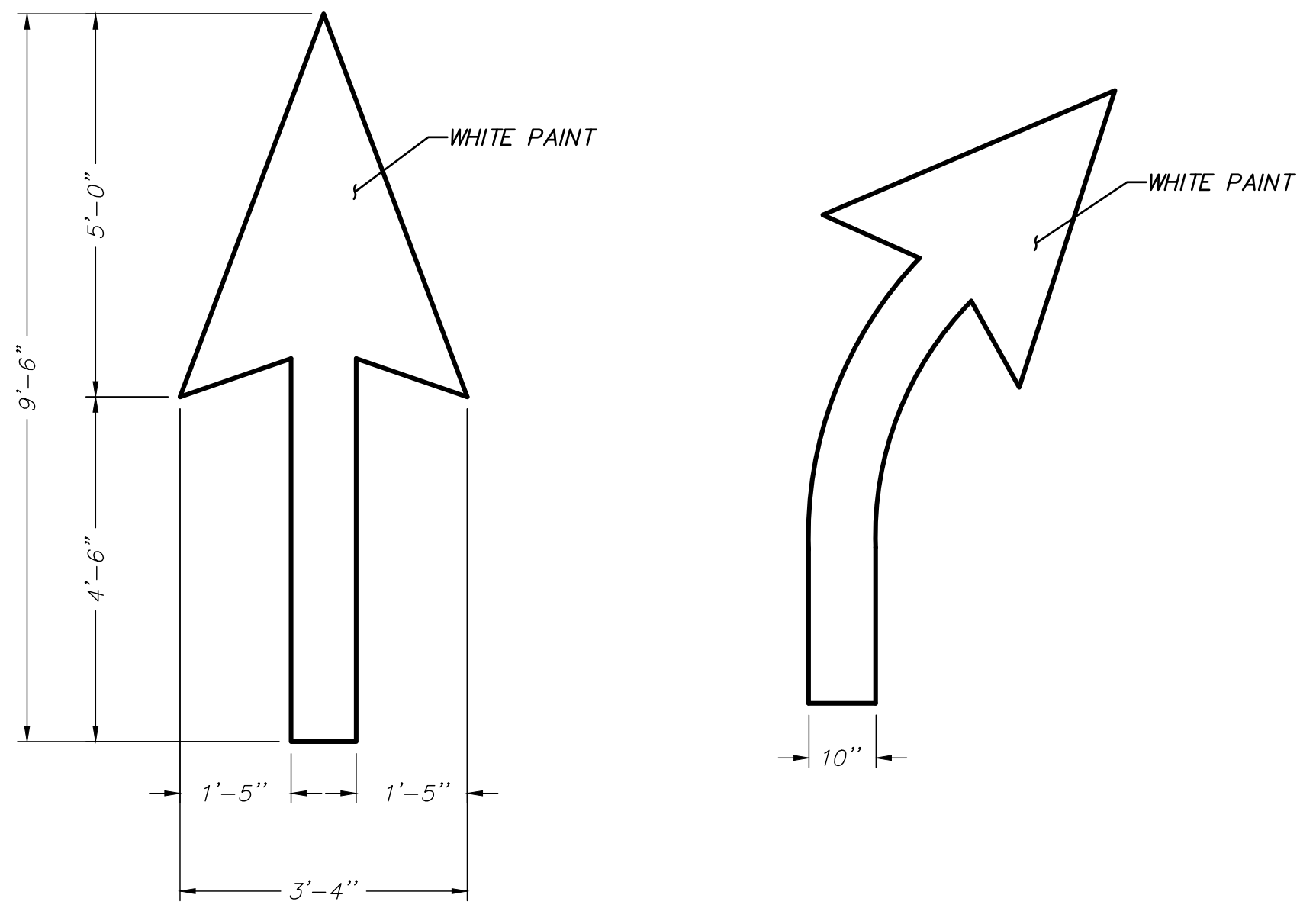
WHITE PAINT
WHITE PAINT
9'-6"
5'-0"
4'-6"
1'-5"
1'-5"
3'-4"
10"

NOTE:
INSTALLATION TO CONFORM WITH CURRENT NYSDOT STANDARDS AND SPECIFICATIONS.

DIRECTIONAL ARROWS DETAIL

(N.T.S.)

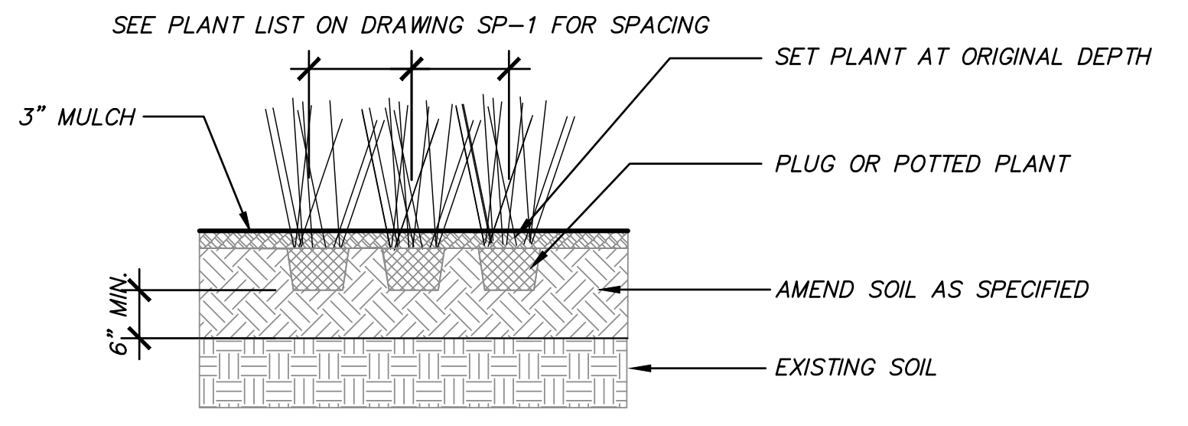
SEE PLANT LIST ON DRAWING SP-1 FOR SPACING
3" MULCH
SET PLANT AT ORIGINAL DEPTH
PLUG OR POTTED PLANT
AMEND SOIL AS SPECIFIED
EXISTING SOIL
6" MIN.

PERENNIAL / ORNAMENTAL GRASS PLANTING DETAIL

(N.T.S.)

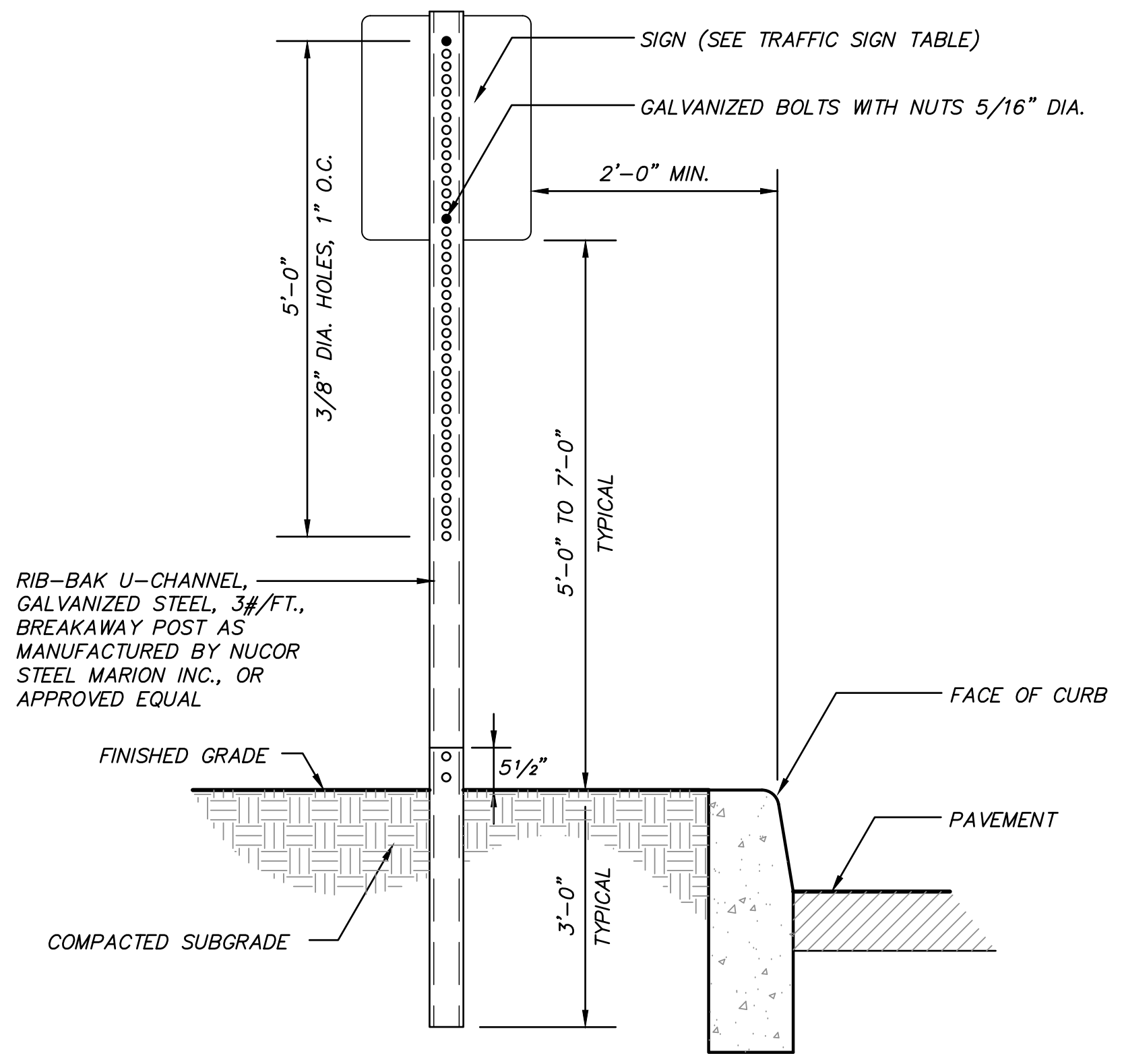
SIGN (SEE TRAFFIC SIGN TABLE)
GALVANIZED BOLTS WITH NUTS 5/16" DIA.
2'-0" MIN.
5'-0"
3/8" DIA. HOLES, 1" O.C.
5'-0" TO 7'-0" TYPICAL
RIB-BAK U-CHANNEL, GALVANIZED STEEL, 3#/FT., BREAKAWAY POST AS MANUFACTURED BY NUCOR STEEL MARION INC., OR APPROVED EQUAL
FINISHED GRADE
5 1/2"
FACE OF CURB
PAVEMENT
COMPACTED SUBGRADE
3'-0" TYPICAL

NOTE: FOR HANDICAP PARKING SIGNAGE, SIGNS SHALL BE INSTALLED AT A CLEAR HEIGHT OF BETWEEN 5'-0" AND 7'-0" ABOVE GRADE OF PARKING SPACE AND SUCH THAT SIGNS SHALL NOT BE OBSCURED BY A VEHICLE PARKED IN THE SPACE.

TRAFFIC SIGN DETAIL

(N.T.S.)

SIGN DATA TABLE

LOCATION NO.	TEXT	M.U.T.C.D. NUMBER	SIZE OF SIGN (s.f.)	DESCRIPTION
1	NO PARKING ANY TIME	R7-1	12" x 18"	Red on White
2	RESERVED PARKING ♿	NY R7-8*	12" x 18"	Green on White Blue Symbol
	VAN ACCESSIBLE	R7-8P	12" x 6"	Green on White
3	DO NOT ENTER	R5-1C	30" x 30"	White on Red

* NOTE: New NYS Handicap symbol recognized only by NYS

NOTE:
PROVIDE STAKING AND GUYING FOR TREES PLANTED ON SLOPES GREATER THAN 3H:1V, IN EXPOSED, WINDY AREAS AND AS SPECIFIED BY LANDSCAPE ARCHITECT. GUY WIRES AND STAKES SHALL BE REMOVED WITHIN TWELVE (12) MONTHS OF PLANTING.

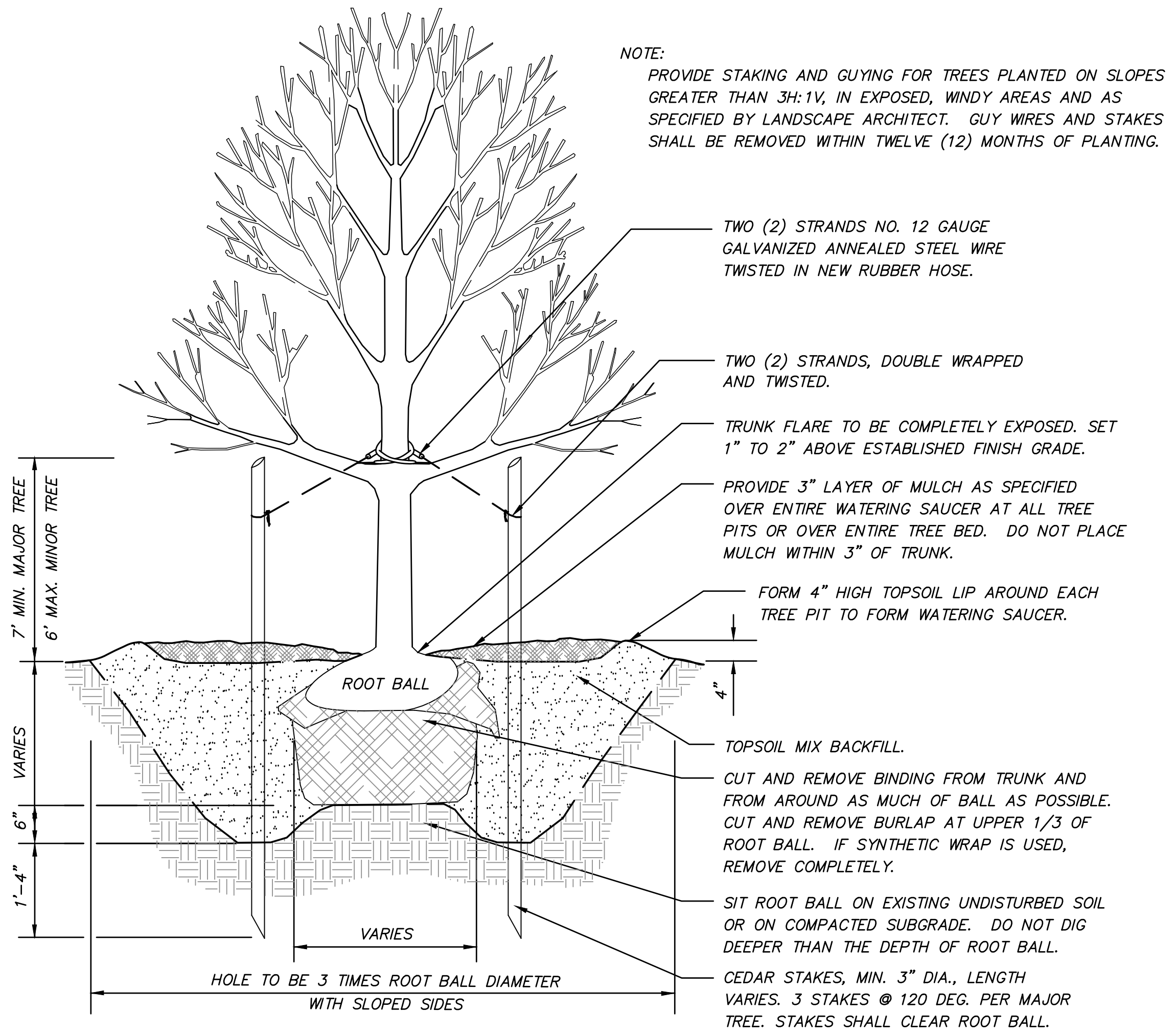
TWO (2) STRANDS NO. 12 GAUGE GALVANIZED ANNEALED STEEL WIRE TWISTED IN NEW RUBBER HOSE.
TWO (2) STRANDS, DOUBLE WRAPPED AND TWISTED.
TRUNK FLARE TO BE COMPLETELY EXPOSED. SET 1" TO 2" ABOVE ESTABLISHED FINISH GRADE.
PROVIDE 3" LAYER OF MULCH AS SPECIFIED OVER ENTIRE WATERING SAUCER AT ALL TREE PITS OR OVER ENTIRE TREE BED. DO NOT PLACE MULCH WITHIN 3" OF TRUNK.
FORM 4" HIGH TOPSOIL LIP AROUND EACH TREE PIT TO FORM WATERING SAUCER.
4"
ROOT BALL
TOPSOIL MIX BACKFILL.
CUT AND REMOVE BINDING FROM TRUNK AND FROM AROUND AS MUCH OF BALL AS POSSIBLE. CUT AND REMOVE BURLAP AT UPPER 1/3 OF ROOT BALL. IF SYNTHETIC WRAP IS USED, REMOVE COMPLETELY.
SIT ROOT BALL ON EXISTING UNDISTURBED SOIL OR ON COMPACTED SUBGRADE. DO NOT DIG DEEPER THAN THE DEPTH OF ROOT BALL.
CEDAR STAKES, MIN. 3" DIA., LENGTH VARIES. 3 STAKES @ 120 DEG. PER MAJOR TREE. STAKES SHALL CLEAR ROOT BALL.
7' MIN. MAJOR TREE
6' MAX. MINOR TREE
VARIES
6"
1'-4"
VARIES
HOLE TO BE 3 TIMES ROOT BALL DIAMETER WITH SLOPED SIDES

TREE PLANTING DETAIL

(N.T.S.)

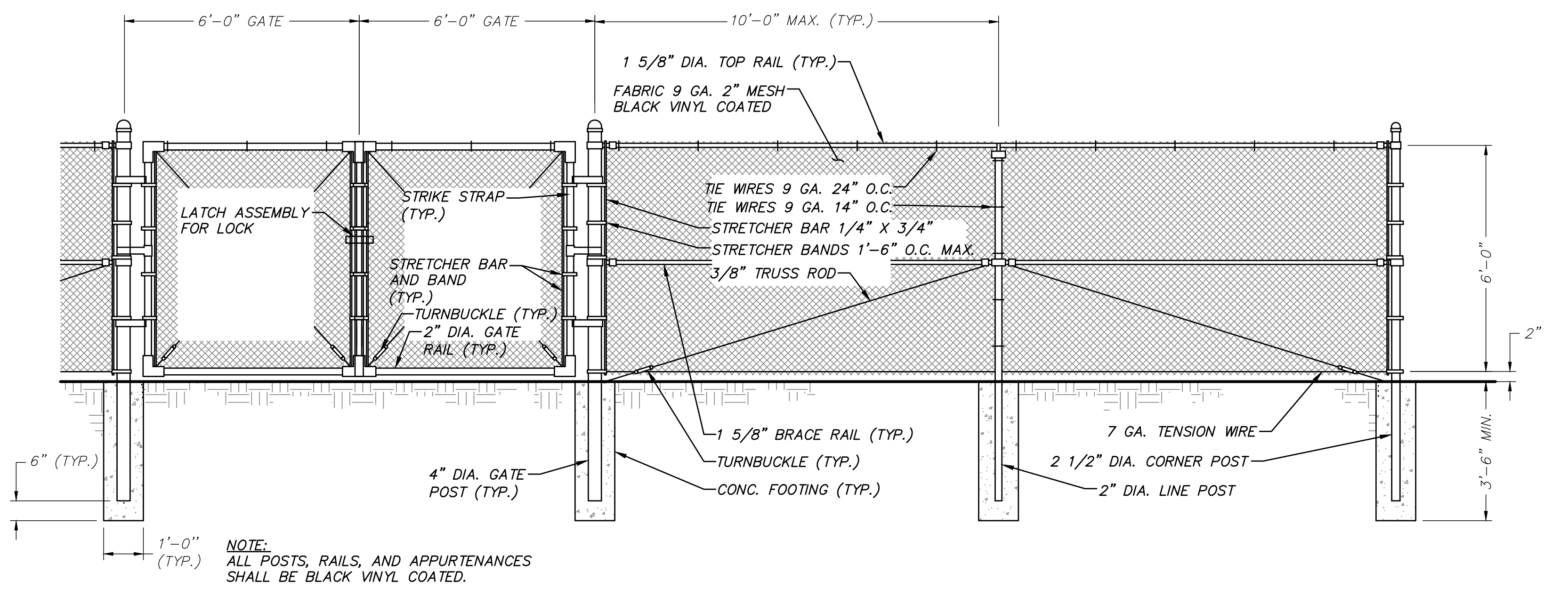
6'-0" GATE
6'-0" GATE
10'-0" MAX. (TYP.)
1 5/8" DIA. TOP RAIL (TYP.)
FABRIC 9 GA. 2" MESH BLACK VINYL COATED
LATCH ASSEMBLY FOR LOCK
STRIKE STRAP (TYP.)
STRETCHER BAR AND BAND (TYP.)
TURNBUCKLE (TYP.)
2" DIA. GATE RAIL (TYP.)
TIE WIRES 9 GA. 24" O.C.
TIE WIRES 9 GA. 14" O.C.
STRETCHER BAR 1/4" X 3/4"
STRETCHER BANDS 1'-6" O.C. MAX.
3/8" TRUSS ROD
6'-0"
2"
3'-6" MIN.
6" (TYP.)
1'-0" (TYP.)
4" DIA. GATE POST (TYP.)
1 5/8" BRACE RAIL (TYP.)
TURNBUCKLE (TYP.)
CONC. FOOTING (TYP.)
7 GA. TENSION WIRE
2 1/2" DIA. CORNER POST
2" DIA. LINE POST

NOTE:
ALL POSTS, RAILS, AND APPURTENANCES SHALL BE BLACK VINYL COATED.

CHAIN LINK FENCE DETAIL

(N.T.S.)

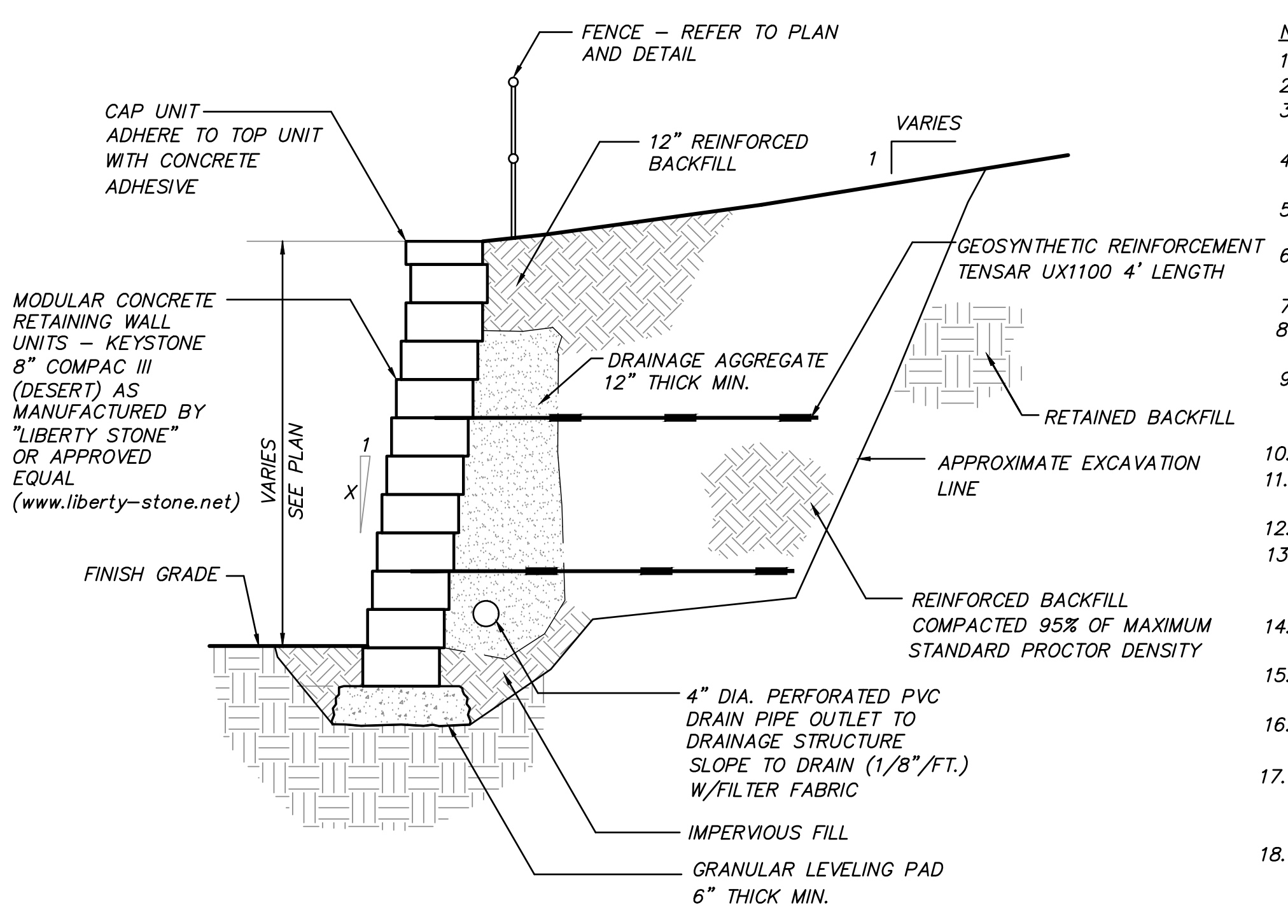
FENCE – REFER TO PLAN AND DETAIL
CAP UNIT ADHERE TO TOP UNIT WITH CONCRETE ADHESIVE
12" REINFORCED BACKFILL
VARIES
1
MODULAR CONCRETE RETAINING WALL UNITS – KEYSTONE 8" COMPAC III (DESERT) AS MANUFACTURED BY "LIBERTY STONE" OR APPROVED EQUAL (www.liberty-stone.net)
GEOSYNTHETIC REINFORCEMENT TENSAR UX1100 4' LENGTH
DRAINAGE AGGREGATE 12" THICK MIN.
RETAINED BACKFILL
VARIES SEE PLAN
1
X
APPROXIMATE EXCAVATION LINE
FINISH GRADE
REINFORCED BACKFILL COMPACTED 95% OF MAXIMUM STANDARD PROCTOR DENSITY
4" DIA. PERFORATED PVC DRAIN PIPE OUTLET TO DRAINAGE STRUCTURE SLOPE TO DRAIN (1/8"/FT.) W/FILTER FABRIC
IMPERVIOUS FILL
GRANULAR LEVELING PAD 6" THICK MIN.

NOTES:
1. STRIP VEGETATION AND ORGANIC SOIL FROM WALL AND GEOSYNTHETIC ALIGNMENT.
2. BENCH CUT ALL EXCAVATED SLOPES.
3. DO NOT OVER EXCAVATE UNLESS DIRECTED BY SITE ENGINEER TO REMOVE UNSUITABLE SOIL.
4. SITE ENGINEER SHALL VERIFY FOUNDATION SOILS AS BEING COMPETENT PER THE DESIGN STANDARDS AND PARAMETERS.
5. LEVELING PAD SHALL CONSIST OF COMPACTED COARSE SAND OR CRUSHED GRAVEL, 6" THICK MIN.
6. CONTRACTOR MAY OPT FOR A LEAN CONCRETE PAD. CONCRETE PAD SHALL BE UNREINFORCED, 3" THICK MAXIMUM.
7. MINIMUM EMBEDMENT OF WALL BELOW FINISH GRADE SHALL BE 6".
8. FOR UNITS TO BE EMBEDDED, COMPACT FILL IN FRONT OF UNITS AT THE SAME TIME FILL BEHIND UNITS IS COMPACTED.
9. DRAINAGE AGGREGATE SHALL BE INSTALLED DIRECTLY BEHIND THE WALL WITHIN 12" OF THE TOP OF THE WALL. DRAINAGE AGGREGATE SHALL NOT EXTEND BELOW FINAL GRADE IN FRONT OF WALL.
10. COMPACTION SHALL BE TO 95% OF MAXIMUM STANDARD PROCTOR DENSITY.(ASTM D-698)
11. COMPACTION TESTS SHALL BE TAKEN AS THE WALL IS INSTALLED. THE MINIMUM NUMBER OF TESTS SHALL BE DETERMINED BY THE SITE SOILS ENGINEER.
12. COMPACTION WITHIN 3 FT. OF WALL SHALL BE LIMITED TO HAND OPERATED EQUIPMENT.
13. GEOSYNTHETIC SHALL BE PLACED WITH STRONGEST DIRECTION PERPENDICULAR TO WALL. FOLLOW GEOSYNTHETIC MANUFACTURER'S INSTALLATION INSTRUCTIONS AND WRITTEN SPECIFICATIONS.
14. CONTRACTOR SHALL DIRECT SURFACE RUNOFF TO AVOID DAMAGING WALL WHILE UNDER CONSTRUCTION.
15. ANY SURFACE DRAINAGE FEATURES, FINISH GRADING, PAVEMENT, OR TURF SHALL BE INSTALLED IMMEDIATELY AFTER WALL IS COMPLETED.
16. FOLLOW APPLICABLE PROVISIONS OF THE MANUFACTURER'S INSTALLATION INSTRUCTIONS AND WRITTEN SPECIFICATIONS.
17. PRIOR TO ISSUANCE OF A BUILDING PERMIT, ALL RETAINING WALLS IN EXCESS OF FOUR (4) FEET SHALL BE DESIGNED AND CERTIFIED BY A NEW YORK STATE LICENSED PROFESSIONAL ENGINEER.
18. PRIOR TO ISSUANCE OF ANY CERTIFICATE OF OCCUPANCY, A NEW YORK STATE LICENSED PROFESSIONAL ENGINEER SHALL CERTIFY THE PROPER INSTALLATION AND CONSTRUCTION OF ANY RETAINING WALL IN EXCESS OF FOUR (4) FEET, IN ACCORDANCE WITH THE APPROVED DESIGN.

MODULAR BLOCK RETAINING WALL DETAIL

(N.T.S.)

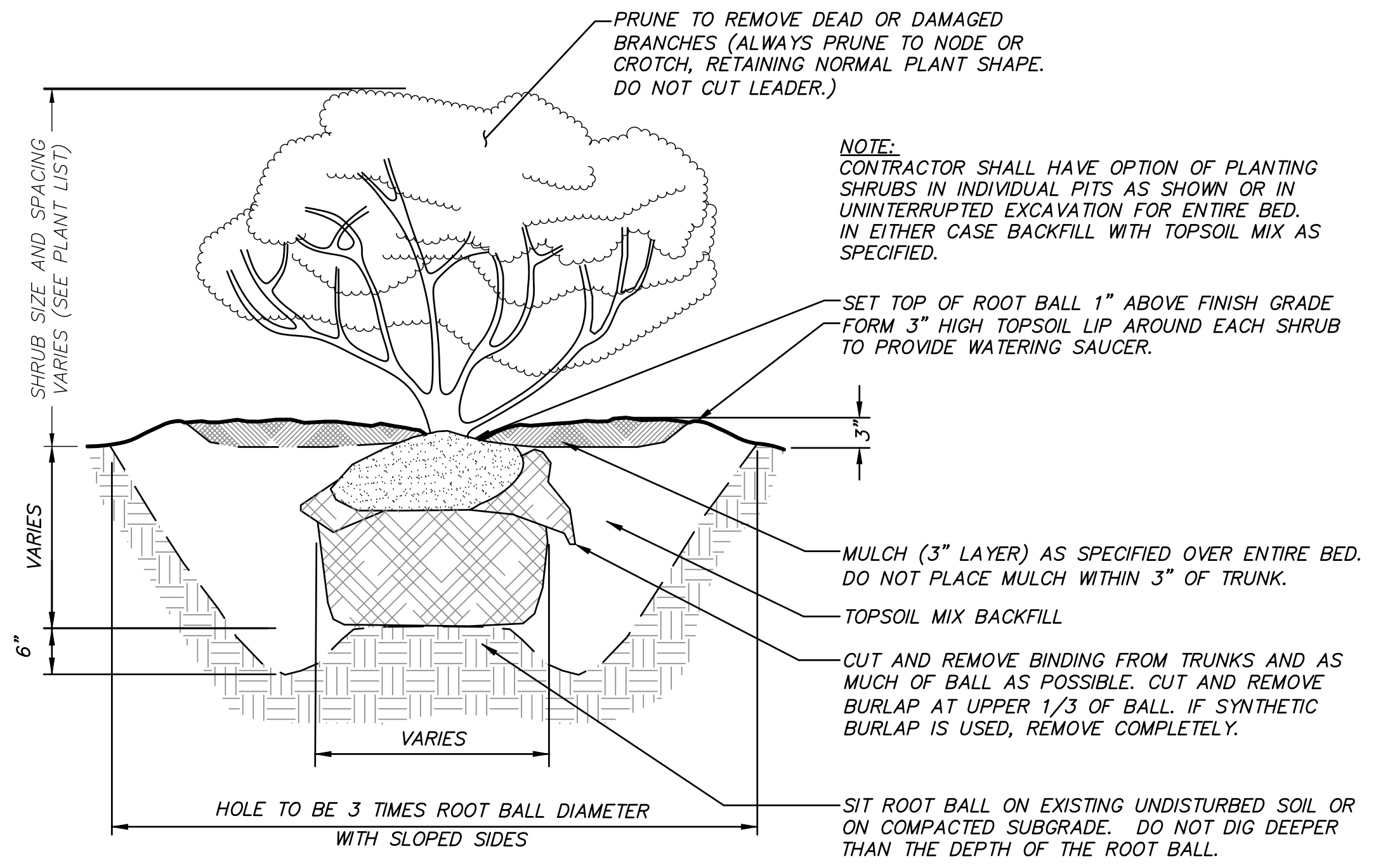
PRUNE TO REMOVE DEAD OR DAMAGED BRANCHES (ALWAYS PRUNE TO NODE OR CROTCH, RETAINING NORMAL PLANT SHAPE. DO NOT CUT LEADER.)
SHRUB SIZE AND SPACING VARIES (SEE PLANT LIST)
SET TOP OF ROOT BALL 1" ABOVE FINISH GRADE
FORM 3" HIGH TOPSOIL LIP AROUND EACH SHRUB TO PROVIDE WATERING SAUCER.
3"
VARIES
6"
MULCH (3" LAYER) AS SPECIFIED OVER ENTIRE BED. DO NOT PLACE MULCH WITHIN 3" OF TRUNK.
TOPSOIL MIX BACKFILL
CUT AND REMOVE BINDING FROM TRUNKS AND AS MUCH OF BALL AS POSSIBLE. CUT AND REMOVE BURLAP AT UPPER 1/3 OF BALL. IF SYNTHETIC BURLAP IS USED, REMOVE COMPLETELY.
VARIES
HOLE TO BE 3 TIMES ROOT BALL DIAMETER WITH SLOPED SIDES
SIT ROOT BALL ON EXISTING UNDISTURBED SOIL OR ON COMPACTED SUBGRADE. DO NOT DIG DEEPER THAN THE DEPTH OF THE ROOT BALL.

NOTE:
CONTRACTOR SHALL HAVE OPTION OF PLANTING SHRUBS IN INDIVIDUAL PITS AS SHOWN OR IN UNINTERRUPTED EXCAVATION FOR ENTIRE BED. IN EITHER CASE BACKFILL WITH TOPSOIL MIX AS SPECIFIED.

SHRUB PLANTING DETAIL

(N.T.S.)

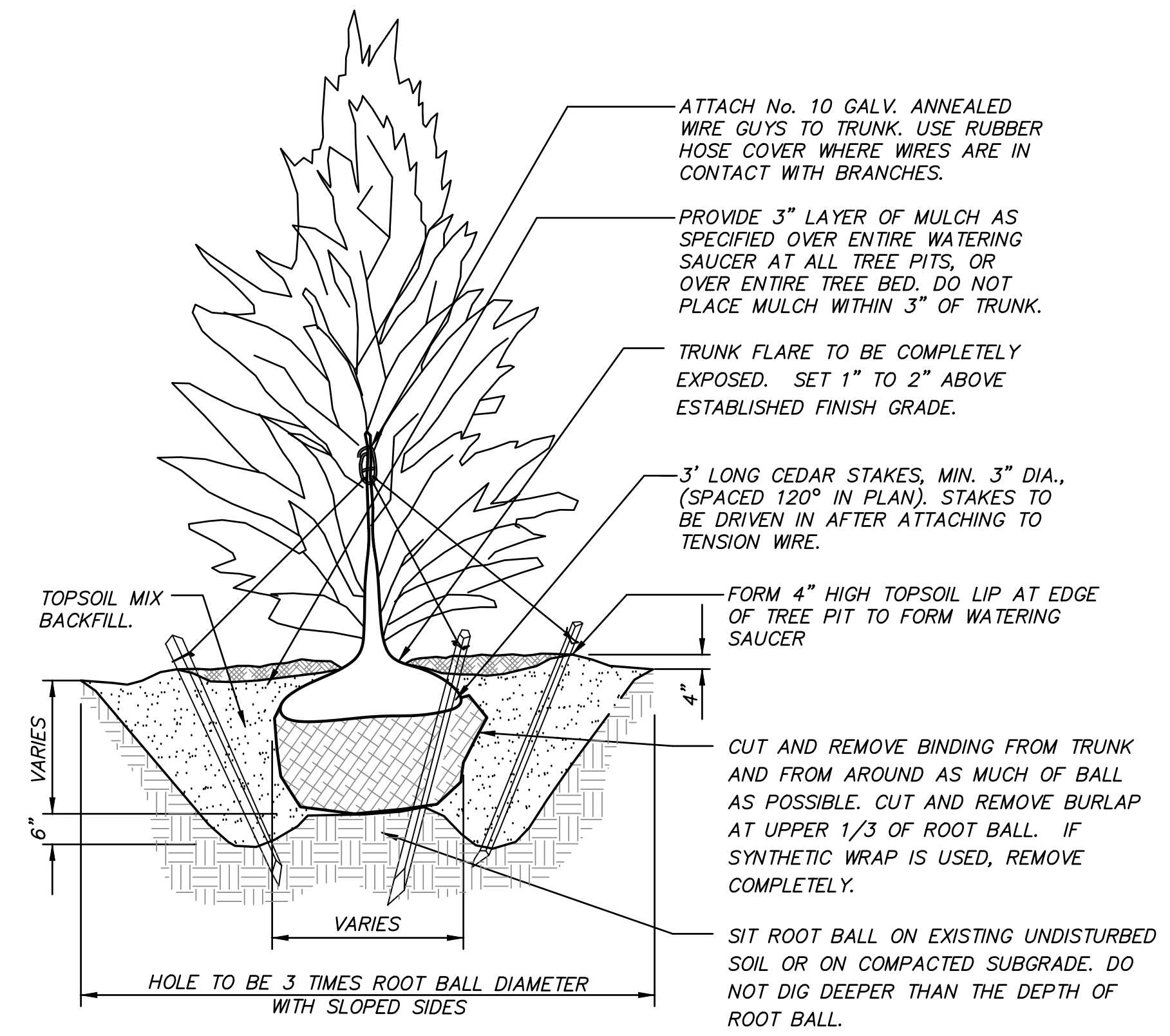
ATTACH No. 10 GALV. ANNEALED WIRE GUYS TO TRUNK. USE RUBBER HOSE COVER WHERE WIRES ARE IN CONTACT WITH BRANCHES.
PROVIDE 3" LAYER OF MULCH AS SPECIFIED OVER ENTIRE WATERING SAUCER AT ALL TREE PITS, OR OVER ENTIRE TREE BED. DO NOT PLACE MULCH WITHIN 3" OF TRUNK.
TRUNK FLARE TO BE COMPLETELY EXPOSED. SET 1" TO 2" ABOVE ESTABLISHED FINISH GRADE.
3' LONG CEDAR STAKES, MIN. 3" DIA., (SPACED 120° IN PLAN). STAKES TO BE DRIVEN IN AFTER ATTACHING TO TENSION WIRE.
TOPSOIL MIX BACKFILL.
FORM 4" HIGH TOPSOIL LIP AT EDGE OF TREE PIT TO FORM WATERING SAUCER
4"
VARIES
6"
CUT AND REMOVE BINDING FROM TRUNK AND FROM AROUND AS MUCH OF BALL AS POSSIBLE. CUT AND REMOVE BURLAP AT UPPER 1/3 OF ROOT BALL. IF SYNTHETIC WRAP IS USED, REMOVE COMPLETELY.
VARIES
HOLE TO BE 3 TIMES ROOT BALL DIAMETER WITH SLOPED SIDES
SIT ROOT BALL ON EXISTING UNDISTURBED SOIL OR ON COMPACTED SUBGRADE. DO NOT DIG DEEPER THAN THE DEPTH OF ROOT BALL.

NOTE:
PROVIDE STAKING AND GUYING FOR TREES PLANTED ON SLOPES GREATER THAN 3H:1V, IN EXPOSED, WINDY AREAS AND AS SPECIFIED BY LANDSCAPE ARCHITECT. GUY WIRES AND STAKES SHALL BE REMOVED WITHIN TWELVE MONTHS OF PLANTING.

EVERGREEN TREE PLANTING DETAIL

(N.T.S.)

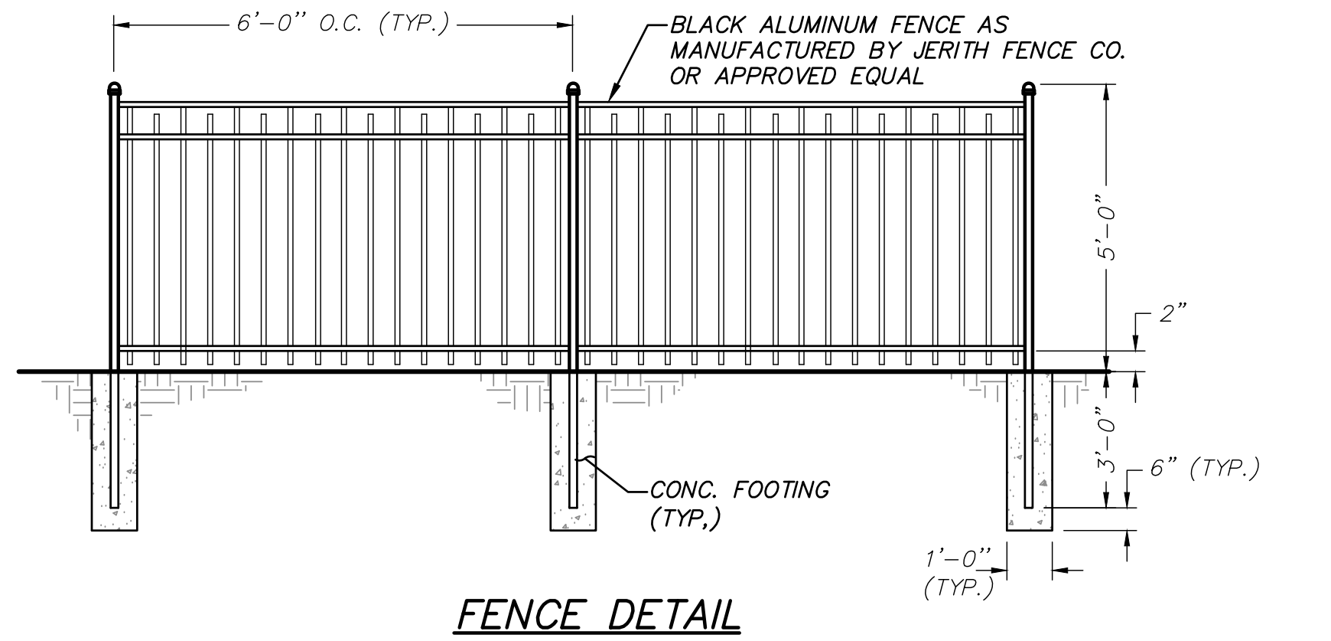
6'-0" O.C. (TYP.)
BLACK ALUMINUM FENCE AS MANUFACTURED BY JERITH FENCE CO. OR APPROVED EQUAL
5'-0"
2"
3'-0"
6" (TYP.)
CONC. FOOTING (TYP,)
1'-0" (TYP.)

FENCE DETAIL

(N.T.S.)

NO.	DATE	REVISION	BY
3	2-26-25	REVISED PER VILLAGE COMMENTS	NFB
2	9-24-24	REVISED PER VILLAGE COMMENTS	NFB
1	8-1-24	REVISED PER VILLAGE COMMENTS	TSM

INSITE
ENGINEERING, SURVEYING &
LANDSCAPE ARCHITECTURE, P.C.

3 Garrett Place
Carmel, NY 10512
(845) 225-9690
(845) 225-9717 fax
www.insite-eng.com

PROJECT:
1 CROTON POINT
CROTON POINT AVE. & VETERANS PLAZA, VILLAGE OF
CROTON-ON-HUDSON, WESTCHESTER CO., NY

DRAWING:
DETAILS

STATE OF NEW YORK
RICHARD D. WILLIAMS JR.
085866
LICENSED PROFESSIONAL ENGINEER

PROJECT NUMBER	24154.100	PROJECT MANAGER	R.D.W.
DATE	7-11-24	DRAWN BY	M.E.U.
SCALE	AS SHOWN	CHECKED BY	D.L.M.

DRAWING NO. D-1

SHEET 7 / 10

GENERAL NOTES FOR ACCESSIBLE ROUTES:

1. Accessible routes to and within a site shall be provided from accessible building entrances to accessible pedestrian walkways, accessible facilities, accessible site elements and spaces, accessible parking spaces, access aisles, passenger loading zones, and to the public way, including public transportation stops, public streets and sidewalks.

2. These sheets are in accordance with the Americans with Disabilities Act (ADA) and the NYS Building Code for Site Accessibility.

3. Dimensions shown in the details as minimums and maximums are the limits for design and field layout. Facilities shall not be constructed with values outside the limits for work acceptance. See table "Design Element Tolerances" on this sheet.

4. To check field layout and to verify work acceptance, all slopes and grades will be measured with a 4' long digital level using at least two readings. Where the readings vary, the measurements will be averaged. Grade (running slope) will be measured along the centerline and offset 1' to 1'–6" from the centerline. Cross slopes will be measured perpendicular to centerline at 5' to 10' intervals.

5. Grade (running slopes) are measured in the direction of pedestrian travel. Cross slopes are measured perpendicular to the direction of pedestrian travel.

6. Joints between sidewalks, curbs, turning spaces and roadways shall be flush and free from abrupt vertical changes greater than 1/4". Vertical surface discontinuities between 1/4" and 1/2" shall be beveled with a slope not steeper than 1V:2H. The bevel shall be applied across the entire joint.

7. Sidewalks are connected to roadways by either blended transitions or curb ramps. Blended transitions are connections between the sidewalk level and the roadway level that have a maximum grade (running slope) of 5.0%, and transitions greater than 5.0% are considered curb ramps.

8. Curb ramps and blended transitions may require the installation of detectable warnings. See additional "Detectable Warning" notes on this sheet, and sidewalk and curb ramp details included in the site plan set.

9. Vertical alignment shall be generally planar. Grade breaks within the pedestrian access route shall be perpendicular to the direction of travel and shall not be rounded.

10. Sidewalk grade (running slope) shall not exceed 4.5% for design and layout, except when matching into existing sidewalk or when the highway grade is steeper. When adjacent road grade is greater than 5.0%, the sidewalk grade shall not exceed the adjacent road grade.

11. The cross slope of pedestrian access routes shall be 1.5% maximum for design and layout, and 2.0% maximum for work acceptance. The following exceptions are allowed:
    a. Where pedestrian street crossings are provided at intersections without yield or stop control, or where there is any traffic signal without a flashing red, the cross slope of a pedestrian access route contained within a street crossing shall be 4.5% maximum for design and layout, and 5.0% maximum for work acceptance.
    b. Where midblock pedestrian street crossings are provided, the cross slope of a pedestrian access route contained within a midblock street crossing shall be permitted to equal the street or highway grade.

12. Marked Accessible Parking Spaces and Access Aisles:
    a. Dimensions – accessible parking spaces shall be at least 8' wide and shall have an adjacent access aisle 8' wide measured perpendicular to the stall stripe to accommodate vans with lifts.
    b. Common access aisles for 90° parking – two accessible parking spaces may share a common access aisle. For acute angled parking, such as 60° parking, or where one way driveway aisles would prevent vans with passenger side lifts from backing into accessible spaces, an accessible access aisle must be provided for each accessible parking space, width of access aisles and parking spaces are measured perpendicular to the striping.
    c. Signing – each accessible parking space shall be marked by permanently installed signs which display the International Symbol of Access. Each access aisle shall be marked by permanently installed signs indicating that stopping is not permitted in the aisle. Signs shall not block the accessible clear width of adjacent walkways. Signs located where they may be hit by vehicles being parked shall be installed in a post base. The bottoms of the signs located on posts installed in paved areas shall be 7' minimum above the walkway surface. The bottoms of signs located in unpaved area shall be 7' minimum above the pavement surface.
    d. Surface slopes – slopes at accessible parking spaces, access aisles, and adjoining walkways shall be 1.5% maximum in any direction for design and layout, and 2.0% maximum for work acceptance, while providing positive drainage.
    e. Overhead clearance – vehicle access routes to and from accessible parking spaces, including in garages and open parking structures, shall have a minimum vertical clearance of 8'–2".
    f. Pavement marking colors – required accessible parking space and access aisle striping and other optional pavement markings, such as the International Symbol of Access, shall be painted white or blue.
    g. A smooth, flush transition must be provided between all pedestrian walkways, accessible parking spaces and aisles.
    h. Where a change in direction is required to access a curb ramp from an access aisle, a turning space 4'–0" x 4'–0" minimum shall be provided at the base or the top of curb ramp, as applicable. The cross slope of turning spaces shall not exceed 1.5% in any direction for design and layout, and 2.0% for work acceptance, while providing positive drainage.

13. Sidewalk Curb Ramps:
    a. Walking surfaces of sidewalk curb ramps shall be stable, firm and slip resistant.
    b. The minimum width of a curb ramp shall be 4'–0". Refer to site plans and sidewalk curb ramp details for curb ramp widths.
    c. The grade (running slope) of a curb ramp shall be a minimum of 5.0%. The grade for design and layout shall be 7.5% maximum, and 8.3% maximum for ADA accessibility and work acceptance.
    d. The cross slope of the curb ramp shall be as flat as possible and still provide positive drainage. The cross slope of a curb ramp shall not exceed 1.5% for design and layout, and 2.0% maximum for work acceptance.
    e. Where provided, side flares for curb ramps where a pedestrian circulation path crosses the curb ramp shall be 9.5% maximum for design and layout, and 10.0% maximum for work acceptance. The slope of flared sides is measured parallel to the curb line.
    f. Curb ramps at marked crosswalks shall be wholly contained within the markings, excluding any flared sides.
    g. Where a change in direction is required to utilize a curb ramp, a turning space shall be provided at the base or the top of curb ramp as applicable. Turning spaces shall be permitted to overlap clear spaces.
    h. Where there are no vertical constraints at the back of sidewalk, (e.g., vertical curb, buildings, fences) the turning space dimensions shall be 4'–0" x 4'–0" minimum. Where the turning space is constrained at the back of sidewalk, the turning space shall be 4'–0" x 5'–0" minimum. The 5'–0" dimension shall be provided perpendicular to the constraint.
    i. Turning spaces shall not be designed with cross slope greater than 1.5% in any direction for design and layout, while providing positive drainage. The maximum cross slope for work acceptance is 2.0%.
    j. Beyond the bottom grade break, a clear space of 4'–0" x 4'–0" minimum shall be provided within the width of the pedestrian crosswalk, and outside the parallel vehicle travel lane. The clear space may overlap turning spaces, detectable warning surfaces, and drop curb.

14. Detectable Warning:
    a. Detectable warning surfaces shall be provided at curb ramps and blended transitions at pedestrian street crossings.
    b. Detectable warning surfaces shall be provided where the pedestrian access route crosses driveways with signal, yield or stop control. Detectable warning surfaces shall not be provided at crossings of uncontrolled driveway aprons.
    c. Some detectable warning products require a concrete border for proper installation. If required, the border shall not exceed 2". Where the back of curb edge is tooled to provide a radius, the border dimension shall be measured from the inside edge of the curb radius.
    d. The details provided are not drawn to scale. The quantity of domes depicted on the detectable warning unit is for illustration only. The size of the detectable warning field shall be 2'–0" minimum in the direction of travel and shall extend the full width of the curb ramp or flush surface, excluding any flared sides. The width of the detectable warning field includes a concrete border, if provided.
    e. On slopes of 5.0% or greater, the rows of domes shall be aligned to be perpendicular or radial to the lower grade break on the ramp run. Where domes are arrayed radially, they may differ in dome diameter and center–to–center spacing within the ranges specified on sheet 2 of the New York State Department of Transportation (NYSDOT) Standard Sheets 608–01. On slopes less than 5.0%, dome orientation is less critical and may differ from perpendicular or radial alignment to the grade break.
    f. The detectable warning field shall be the color specified in the contract documents. Detectable warning surfaces shall contrast visually with adjacent gutter, street, highway, or pedestrian access route surface, either light–on–dark or dark–on–light.
    g. Refer to sidewalk curb ramp details for additional information.

15. Walkways Along an Accessible Route:
    a. Walking surfaces shall be stable, firm and slip resistant.
    b. Vertical changes in level along walking surface shall not exceed 1/4". Changes in level greater than 1/4" in height and not more than 1/2" shall be beveled with a slope not steeper than 1V:2H.
    c. The running slope of the walking surfaces shall not be steeper than 4.5%.
    d. The cross slope of a walking surface shall not be steeper than 1.5%.
    e. The clear width of an accessible route shall be 3'–0" minimum.
    f. An accessible route with a clear width less than 5'–0" shall provide passing spaces at intervals of 200' maximum. Passing spaces shall be 5'–0" minimum by 5'–0" minimum.

16. Ramps along an accessible route:
    a. Ramp runs shall have a running slope greater than 5.0%.
    b. Ramp runs shall have a running slope of 7.5% maximum for design and layout, and 8.3% maximum for work acceptance.
    c. The cross slope of ramp runs shall not exceed 1.5% for design and layout, and 2.0% maximum for work acceptance.
    d. Walking surfaces of ramp runs and associated landings shall be stable, firm and slip resistant.
    e. The clear width of a ramp run shall be 3'–0" minimum or as shown. Handrails and handrail supports provided on the ramp run shall not project into the required clear width of the ramp run or associated landing.
    f. The maximum rise for any ramp is 2'–6".
    g. The maximum run for any ramp is 30'–0".
    h. Ramps shall have landings at the bottom and top of each ramp run. Landings shall have a slope not to exceed 1.5% for design and layout, and 2.0% maximum for work acceptance, while providing positive drainage. Landings shall have a clear length and width of 5'–0" minimum.
    i. Adjacent finished grades along sides of ramp and landings shall not have a vertical drop–off greater than 1/2" within 10" of the edge of the concrete. If the adjacent finished grades do not meet this criterion, a 4" minimum high curb shall be provided (see plan for location).
    j. If drop–off to adjacent grade is 2'–6" or greater, "guards" will need to be provided to meet the requirements as specified in the NYS Building Code latest edition.
    k. Refer to concrete handicap ramp detail for additional information.

17. For access to and within refuse enclosures, refer to the Refuse Enclosure Detail.

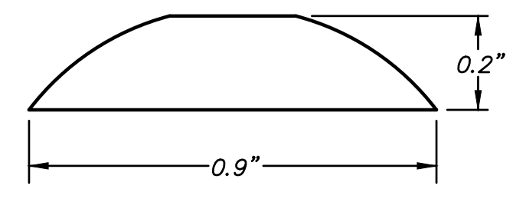

TRUNCATED DOME SECTION

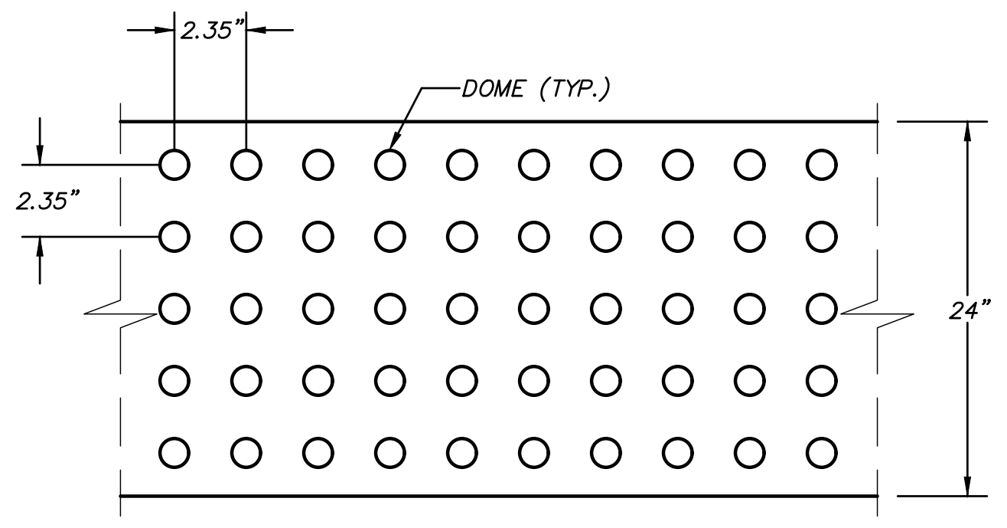

TRUNCATED DOME SPACING

NOTES:

1. The detectable warning field shall consist of raised truncated domes with a nominal diameter of 0.9 inches, a nominal height of 0.2 inches, and a nominal spacing of 2.35 inches on center in accordance with the Department of Justice–Code of Federal Regulations, 28 CFR Part 36, Chapter 4 "ADA Standards for Accessible Design", revised as of July 1, 1994.

2. The details provided are not drawn to scale. The quantity of domes depicted on the detectable warning field (the domes and the entire 24 inch level surface) is for illustration only.

3. The size of the detectable warning field shall be 24 inches in the direction of travel and shall extend the full width of the curb ramp or flush surface, exclusive of side flares.

4. Detectable warnings shall be located so that the edge of the warning field nearest to the roadway or street surface is 6 inches to 8 inches from the edge of the roadway/street, or from the front of the dropped curb, where a dropped curb continues across the bottom of the sidewalk curb ramp.

5. Domes shall be aligned on a square grid in the predominant direction of travel.

6. The detectable warning field shall be the color specified in the contract documents. Detectable warning surfaces shall contrast visually with adjacent gutter, street, highway, or pedestrian access route surface, either light–on–dark or dark–on–light.

7. Payment lines are the 24 inch dimension shown in the details extending the full width of the curb ramp and/or applicable surfaces.

8. Provide a broom finish, flush to adjacent sidewalk/curb, on all areas to receive the detectable warning fields.

TRUNCATED DOME DETAIL

(N.T.S.)

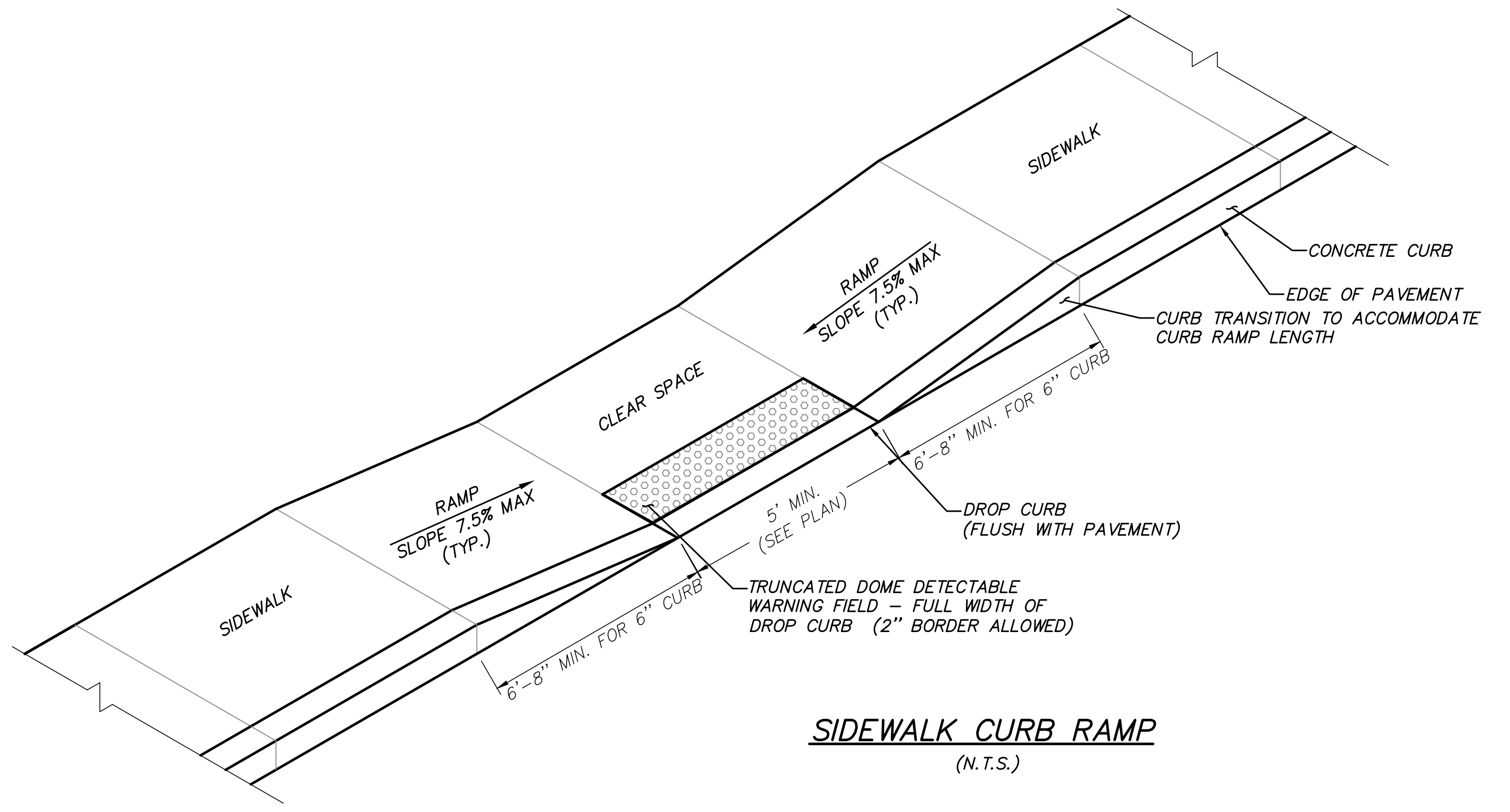

SIDEWALK CURB RAMP

(N.T.S.)

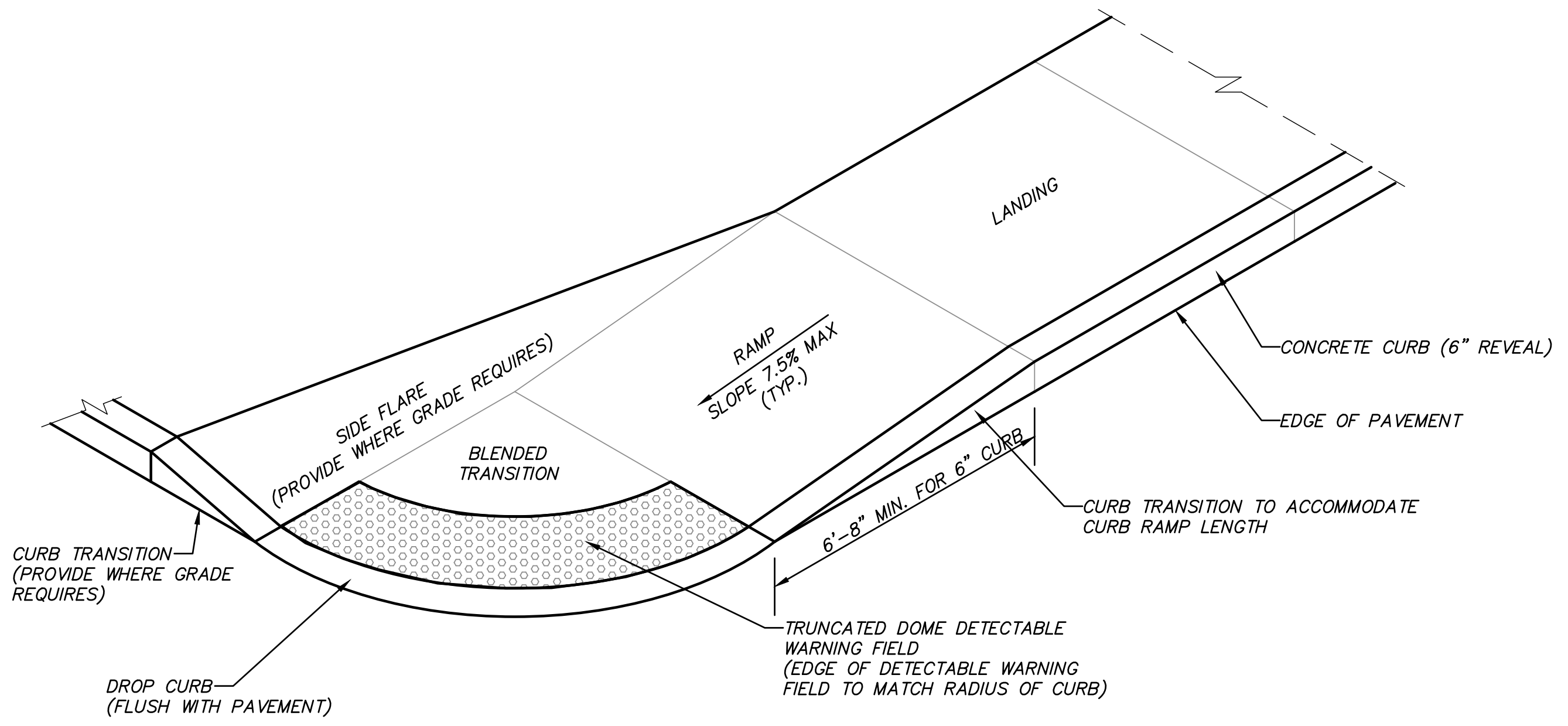
LANDING
RAMP
SLOPE 7.5% MAX
(TYP.)
CONCRETE CURB (6" REVEAL)
SIDE FLARE
(PROVIDE WHERE GRADE REQUIRES)
EDGE OF PAVEMENT
BLENDED TRANSITION
6'–8" MIN. FOR 6" CURB
CURB TRANSITION TO ACCOMMODATE CURB RAMP LENGTH
CURB TRANSITION
(PROVIDE WHERE GRADE REQUIRES)
TRUNCATED DOME DETECTABLE WARNING FIELD
(EDGE OF DETECTABLE WARNING FIELD TO MATCH RADIUS OF CURB)
DROP CURB
(FLUSH WITH PAVEMENT)

SIDEWALK CURB RAMP

(N.T.S.)

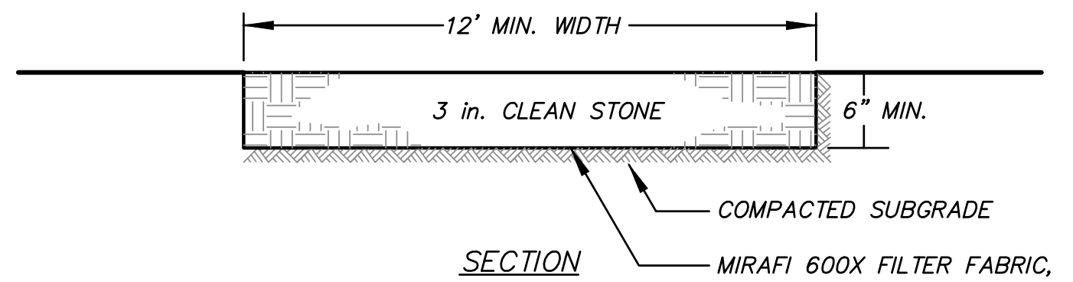

SECTION

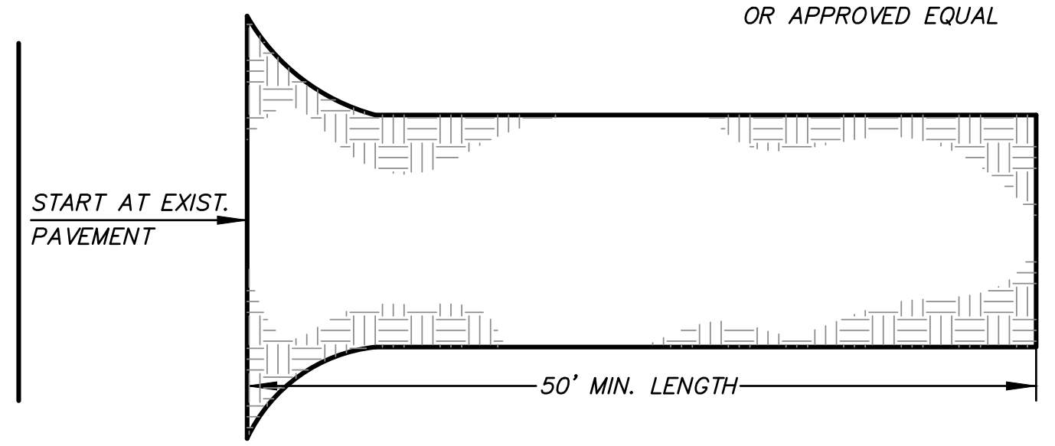

PLAN

INSTALLATION NOTES

1. STONE SIZE – USE 3" STONE

2. LENGTH – AS REQUIRED, BUT NOT LESS THAN 50 FEET (EXCEPT ON A SINGLE RESIDENCE LOT WHERE A 30 FOOT MINIMUM LENGTH WOULD APPLLY

3. THICKNESS – NOT LESS THAN SIX (6) INCHES.

4. WIDTH – 12 FOOT MINIMUM, BUT NOT LESS THAN THE FULL WIDTH AT POINTS WHERE INGRESS OR EGRESS OCCUR. TWENTY FOUR (24) FOOT IF SINGLE ACCESS TO SITE.

5. FILTER CLOTH – WILL BE PLACED OVER THE ENTIRE AREA PRIOR TO PLACING OF STONE. FILTER CLOTH WILL NOT BE REQUIRED ON A SINGLE FAMILY RESIDENCE LOT.

6. SURFACE WATER – ALL SURFACE WATER FLOWING OR DIVERTED TOWARD CONSTRUCTION ENTRANCES SHALL BE PIPED ACROSS THE ENTRANCE. IF PIPING IS IMPRACTICAL, A MOUNTABLE BERM WITH 5:1 SLOPES WILL BE PERMITTED.

7. MAINTENANCE – THE ENTRANCE SHALL BE MAINTAINED IN A CONDITION WHICH WILL PREVENT TRACKING OR FLOWING OF SEDIMENT ONTO PUBLIC RIGHT OF WAY . THIS MAY REQUIRE PERIODIC TOP DRESSING WITH ADDITIONAL STONE AS CONDITIONS DEMAND AND REPAIR AND/OR CLEANOUT OF ANY MEASURES USED TO TRAP SEDIMENT. ALL SEDIMENT SPILLED, DROPPED, WASHED OR TRACKED ONTO PUBLIC RIGHT OF WAY MUST BE REMOVED IMMEDIATELY.

8. WASHING – WHEELS SHALL BE CLEANED TO REMOVE SEDIMENT PRIOR TO ENTRANCE ONTO PUBLIC RIGHT OF WAY. WHEN WASHING IS REQUIRED, IT SHALL BE DONE ON AN AREA STABILIZED WITH STONE AND WHICH DRAINS INTO AN APPROVED SEDIMENT TRAPPING DEVICE.

9. PERIODIC INSPECTION AND NEEDED MAINTENANCE SHALL BE PROVIDED AFTER EACH RAIN.

STABILIZED CONSTRUCTION ACCESS DETAIL

(N.T.S.)

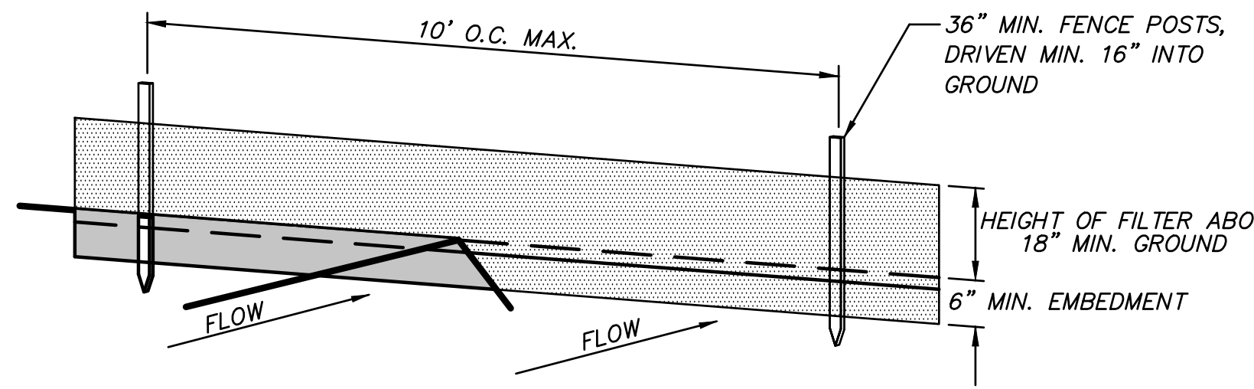
10' O.C. MAX.
36" MIN. FENCE POSTS, DRIVEN MIN. 16" INTO GROUND
HEIGHT OF FILTER ABOVE 18" MIN. GROUND
6" MIN. EMBEDMENT
FLOW
FLOW

PERSPECTIVE VIEW

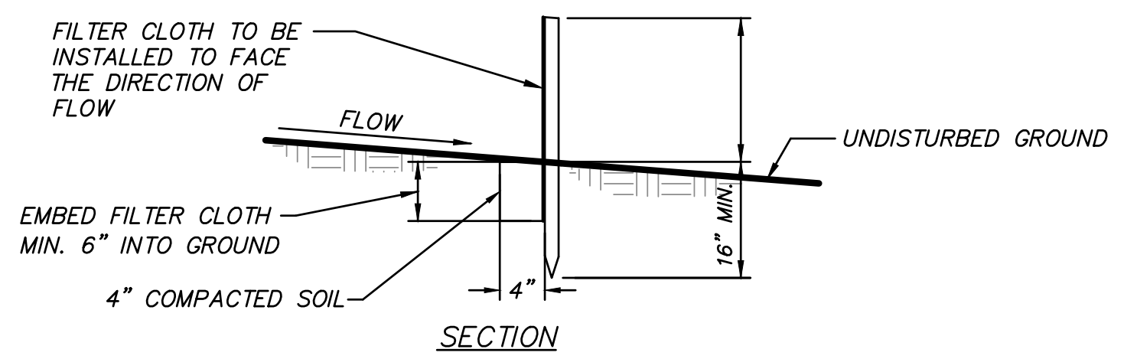
FILTER CLOTH TO BE INSTALLED TO FACE THE DIRECTION OF FLOW
FLOW
UNDISTURBED GROUND
EMBED FILTER CLOTH MIN. 6" INTO GROUND
16" MIN.
4" COMPACTED SOIL
4"

SECTION

CONSTRUCTION NOTES FOR FABRICATED SILT FENCE

1. WOVEN WIRE FENCE TO BE FASTENED SECURELY TO FENCE POSTS WITH WIRE TIES OR STAPLES. POSTS SHALL BE STEEL EITHER "T" OR "U" TYPE OR HARDWOOD.

2. FILTER CLOTH TO BE TO BE FASTENED SECURELY TO WOVEN WIRE FENCE WITH TIES SPACED EVERY 24" AT TOP AND MID SECTION. FENCE SHALL BE WOVEN WIRE, 6" MAXIMUM MESH OPENING.

3. WHEN TWO SECTIONS OF FILTER CLOTH ADJOIN EACH OTHER THEY SHALL BE OVER–LAPPED BY SIX INCHES AND FOLDED. FILTER CLOTH SHALL BE EITHER FILTER X, MIRAFI 100X, STABILINKA T140N, OR APPROVED EQUIVALENT.

4. PREFABRICATED UNITS SHALL BE GEOFAB, ENVIROFENCE, OR APPROVED EQUIVALENT.

5. MAINTENANCE SHALL BE PERFORMED AS NEEDED AND MATERIAL REMOVED WHEN "BULGES" DEVELOP IN THE SILT FENCE.

STANDARD SILT FENCE DETAIL

(N.T.S.)

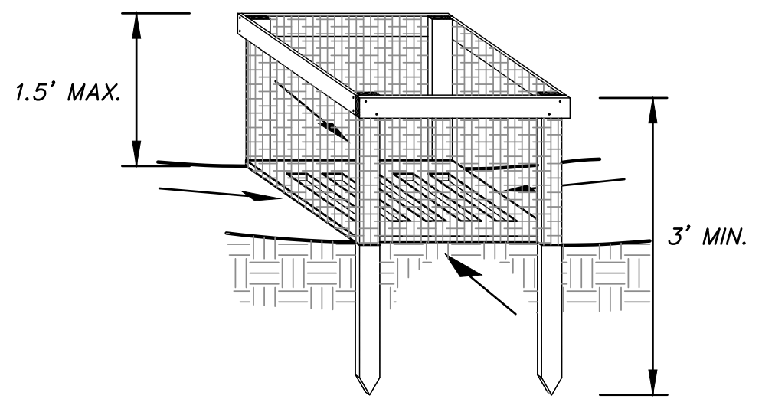

ORTHO VIEW

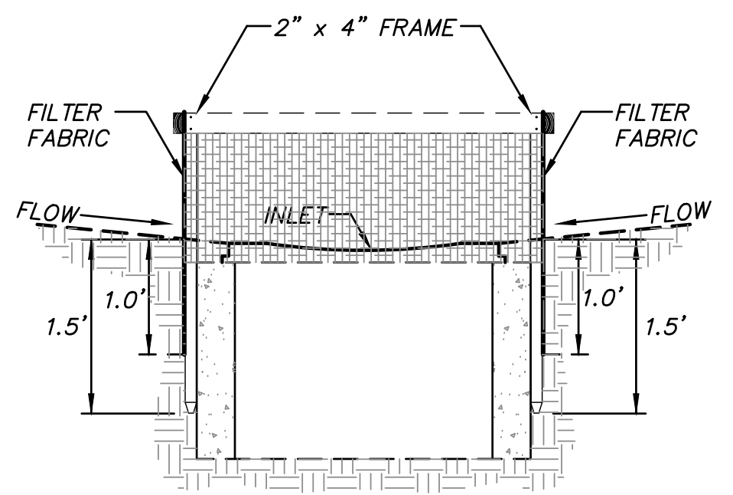

SECTION VIEW

INSTALLATION NOTES

1. FILTER FABRIC SHALL HAVE AN EOS OF 40–85. BURLAP MAYBE USED FOR SHORT TERM APPLICATIONS.

2. CUT FABRIC FROM A CONTINUOUS ROLL TO ELIMINATE JOINTS. IF JOINTS ARE NEEDED THEY WILL BE OVERLAPPED TO THE NEXT STAKE.

3. STAKE MATERIALS WILL BE STANDARD 2" x 4" WOOD OR EQUIVALENT. METAL WITH A MINIMUM LENGTH OF 3 FEET.

4. SPACE STAKES EVENLY AROUND INLET 3 FEET APART AND DRIVE A MINIMUM 18 INCHES DEEP. SPANS GREATER THAN 3 FEET MAY BE BRIDGED WITH THE USE OF WIRE MESH BEHIND THE FILTER FABRIC FOR SUPPORT.

5. FABRIC SHALL BE EMBEDDED 1 FOOT MINIMUM BELOW GROUND AND BACKFILLED. IT SHALL BE SECURELY FASTENED TO THE STAKES AND FRAME.

6. A 2" x 4" WOOD FRAME SHALL BE COMPLETED AROUND THE CREST OF THE FABRIC FOR OVER FLOW STABILITY.

MAXIMUM DRAINAGE AREA 1 ACRE

FILTER FABRIC INLET PROTECTION DETAIL

(N.T.S.)

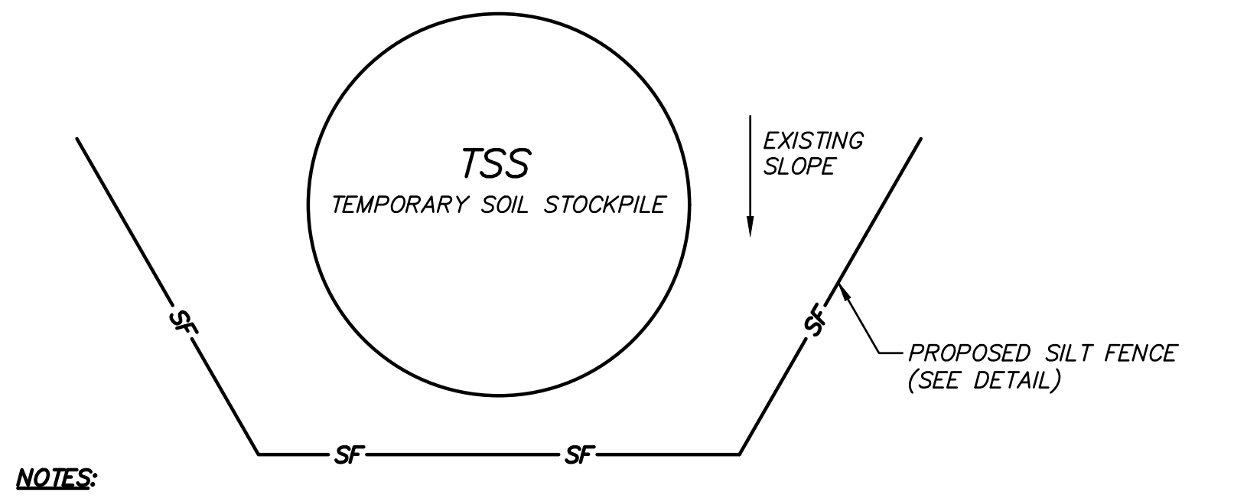

NOTES:

1. AREA CHOSEN FOR STOCKPILE LOCATION SHALL BE DRY AND STABLE.

2. MAXIMUM SLOPE OF STOCKPILE SHALL BE 2:1.

3. UPON COMPLETION OF SOIL STOCKPILING, EACH PILE SHALL BE IMMEDIATELY SEEDED WITH K31 PERENNIAL TALL FESCUE.

4. ALL STOCKPILES SHALL BE PROTECTED WITH SILT FENCING INSTALLED ON THE DOWNGRADIENT SIDE.

TEMPORARY SOIL STOCKPILE DETAIL

(N.T.S.)

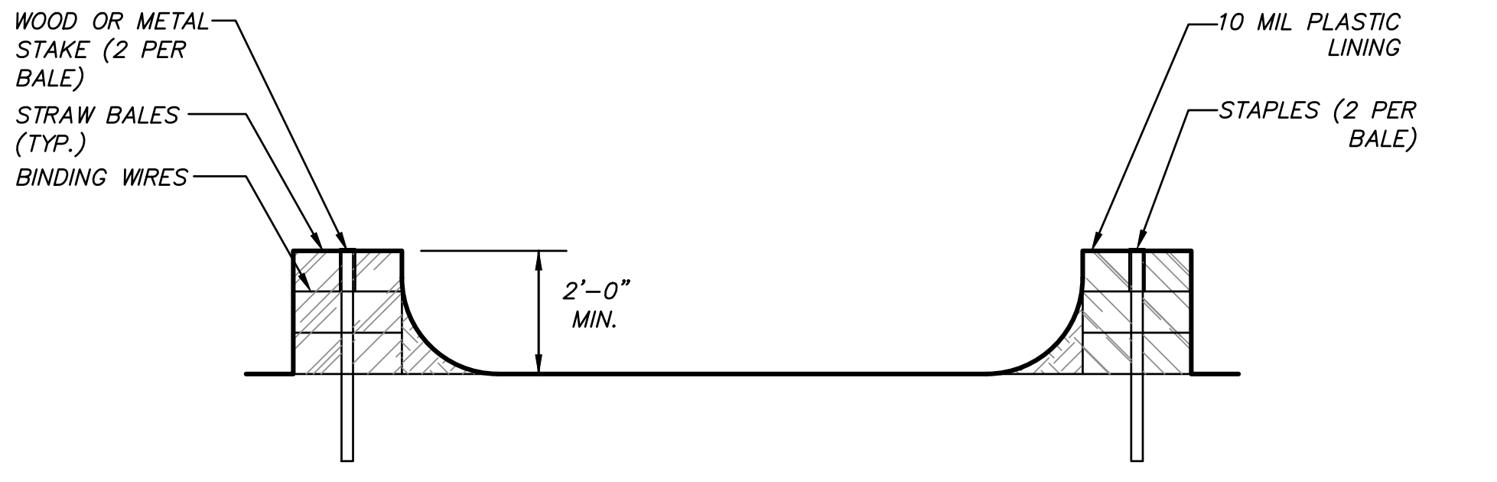

SECTION

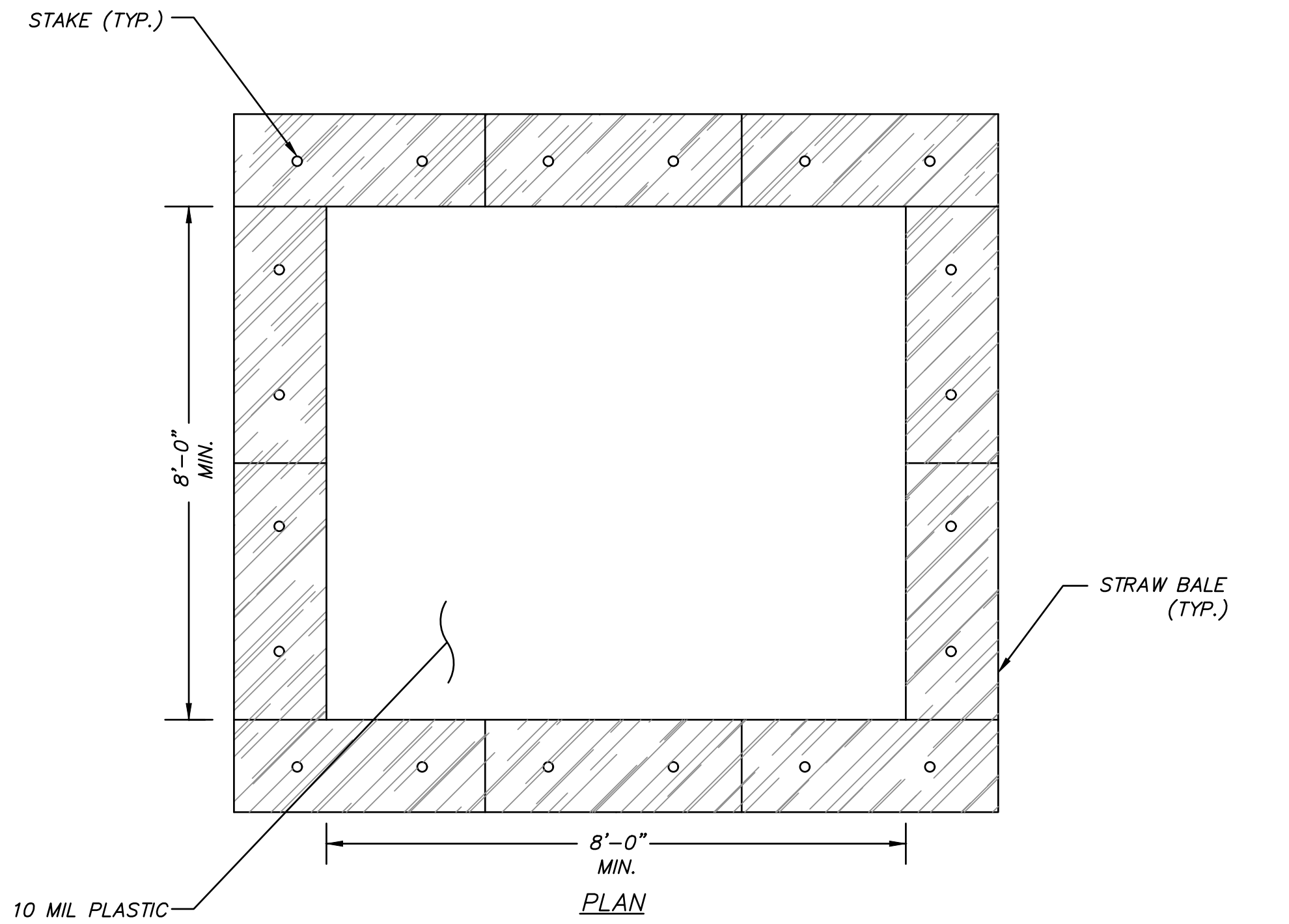

PLAN

CONCRETE TRUCK WASHOUT DETAIL

(N.T.S.)

NOTES

1. TEMPORARY CONCRETE WASHOUT TYPE ABOVE GRADE WILL BE CONSTRUCTED AS SHOWN ABOVE, WITH RECOMMENDED MINIMUM LENGTH AND MINIMUM WIDTH OF 8 FT.

2. THE WASHOUT WILL BE MINIMUM OF 100 FT FROM DRAINAGE SWALES, STORM DRAIN INLETS, WETLANDS, STREAMS AND OTHER SURFACE WATERS.

3. PLASTIC LINING WILL BE FREE OF HOLES, TEARS, OR OTHER DEFECTS THAT COMPROMISE THE IMPERMEABILITY OF THE MATERIAL.

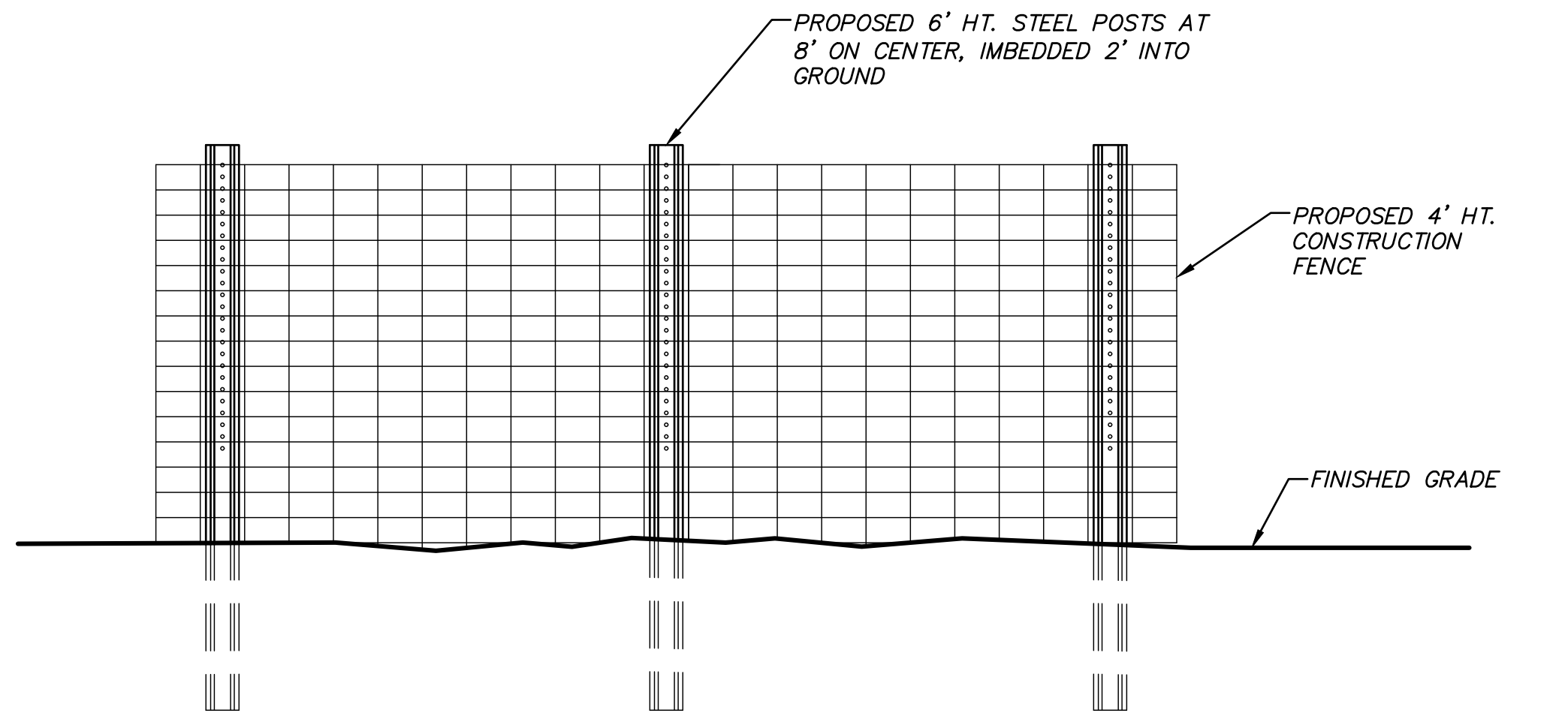
PROPOSED 6' HT. STEEL POSTS AT 8' ON CENTER, IMBEDDED 2' INTO GROUND
PROPOSED 4' HT. CONSTRUCTION FENCE
FINISHED GRADE

CONSTRUCTION FENCE DETAIL

(N.T.S.)

ALTERATION OF THIS DOCUMENT, UNLESS UNDER THE DIRECTION OF A LICENSED PROFESSIONAL ENGINEER, IS A VIOLATION OF SECTION 7209 OF ARTICLE 145 OF THE EDUCATION LAW.

NO.	DATE	REVISION	BY
3	2–26–25	REVISED PER VILLAGE COMMENTS	NFB
2	9–24–24	REVISED PER VILLAGE COMMENTS	NFB
1	8–1–24	REVISED PER VILLAGE COMMENTS	TSM

INSITE
ENGINEERING, SURVEYING &
LANDSCAPE ARCHITECTURE, P.C.
3 Garrett Place
Carmel, NY 10512
(845) 225–9690
(845) 225–9717 fax
www.insite–eng.com

PROJECT:

1 CROTON POINT

CROTON POINT AVE. & VETERANS PLAZA, VILLAGE OF
CROTON–ON–HUDSON, WESTCHESTER CO., NY

DRAWING:

DETAILS

RICHARD D. WILLIAMS JR. 085866

PROJECT NUMBER	24154.100	PROJECT MANAGER	R.D.W.
DATE	7–11–24	DRAWN BY	M.E.U.
SCALE	AS SHOWN	CHECKED BY	D.L.M.

DRAWING NO. D–2

SHEET 8 / 10

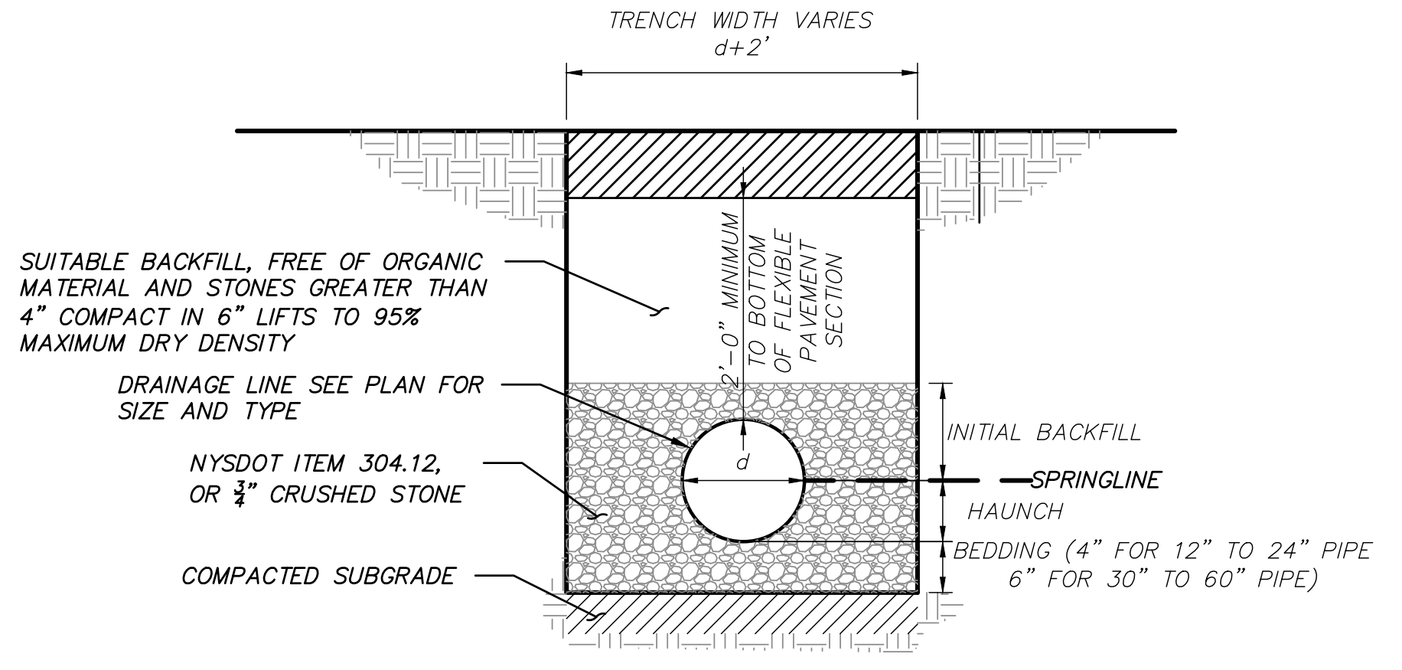
TRENCH WIDTH VARIES
d+2'
SUITABLE BACKFILL, FREE OF ORGANIC MATERIAL AND STONES GREATER THAN 4" COMPACT IN 6" LIFTS TO 95% MAXIMUM DRY DENSITY
DRAINAGE LINE SEE PLAN FOR SIZE AND TYPE
NYSDOT ITEM 304.12, OR ¾" CRUSHED STONE
COMPACTED SUBGRADE
2'-0" MINIMUM TO BOTTOM OF FLEXIBLE PAVEMENT SECTION
d
INITIAL BACKFILL
SPRINGLINE
HAUNCH
BEDDING (4" FOR 12" TO 24" PIPE 6" FOR 30" TO 60" PIPE)

DRAINAGE LINE TRENCH DETAIL

(N.T.S.)

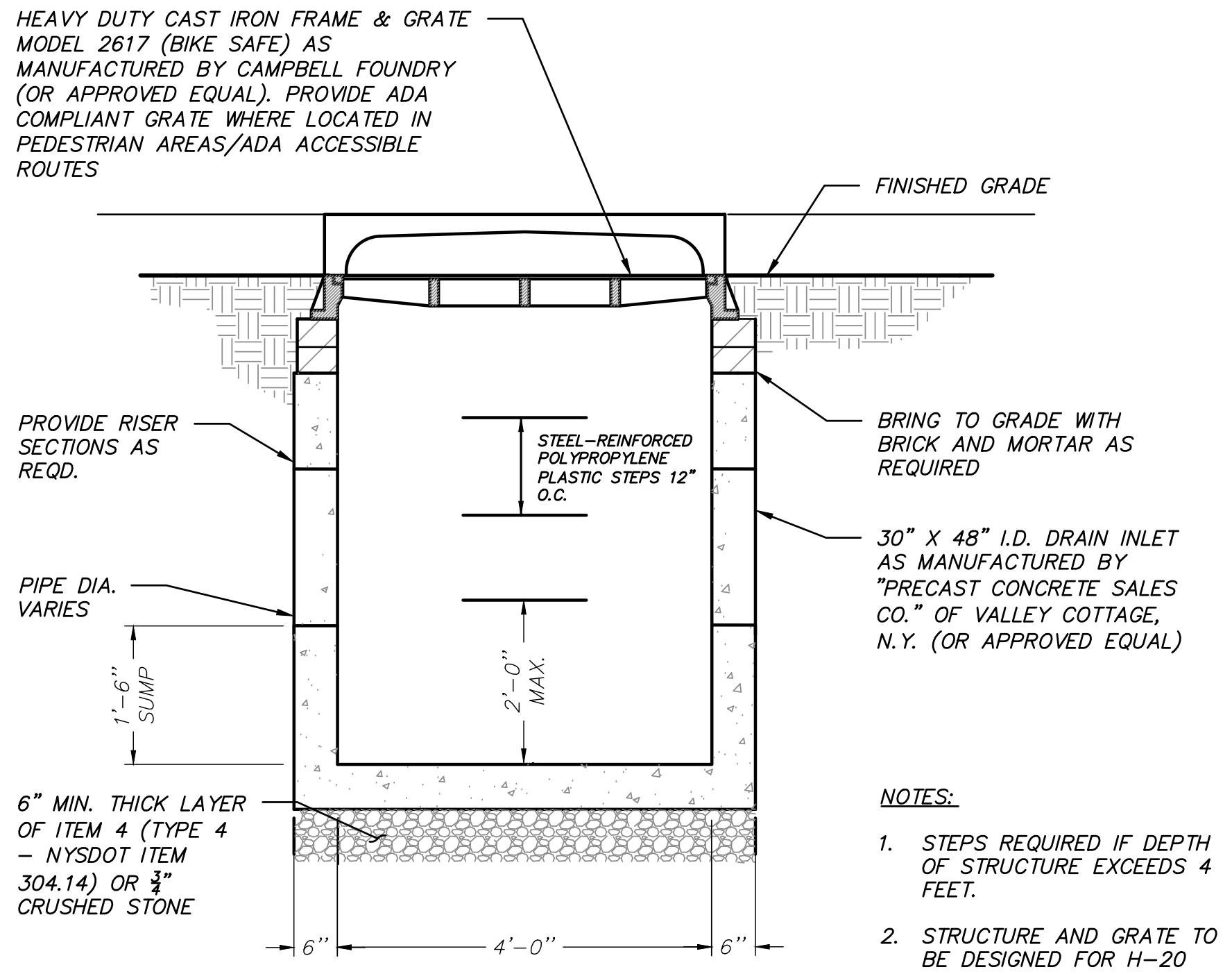
HEAVY DUTY CAST IRON FRAME & GRATE MODEL 2617 (BIKE SAFE) AS MANUFACTURED BY CAMPBELL FOUNDRY (OR APPROVED EQUAL). PROVIDE ADA COMPLIANT GRATE WHERE LOCATED IN PEDESTRIAN AREAS/ADA ACCESSIBLE ROUTES
FINISHED GRADE
PROVIDE RISER SECTIONS AS REQD.
STEEL-REINFORCED POLYPROPYLENE PLASTIC STEPS 12" O.C.
BRING TO GRADE WITH BRICK AND MORTAR AS REQUIRED
30" X 48" I.D. DRAIN INLET AS MANUFACTURED BY "PRECAST CONCRETE SALES CO." OF VALLEY COTTAGE, N.Y. (OR APPROVED EQUAL)
PIPE DIA. VARIES
1'-6" SUMP
2'-0" MAX.
6" MIN. THICK LAYER OF ITEM 4 (TYPE 4 - NYSDOT ITEM 304.14) OR ¾" CRUSHED STONE
6"
4'-0"
6"

NOTES:

1. STEPS REQUIRED IF DEPTH OF STRUCTURE EXCEEDS 4 FEET.
2. STRUCTURE AND GRATE TO BE DESIGNED FOR H-20 LOADING.
3. KNOCKOUT STRUCTURES ACCEPTABLE.

30" X 48" CATCH BASIN DETAIL

(N.T.S.)

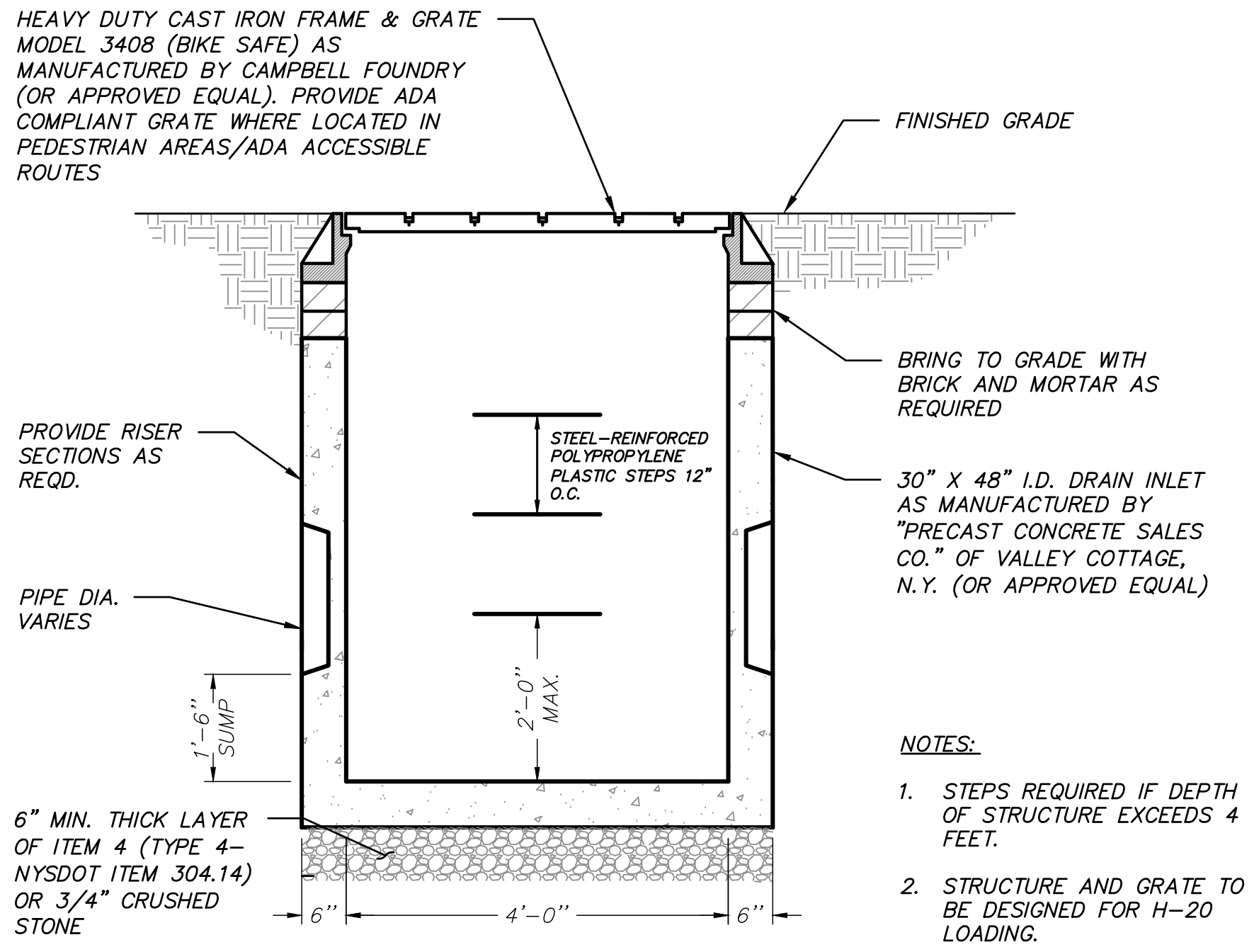
HEAVY DUTY CAST IRON FRAME & GRATE MODEL 3408 (BIKE SAFE) AS MANUFACTURED BY CAMPBELL FOUNDRY (OR APPROVED EQUAL). PROVIDE ADA COMPLIANT GRATE WHERE LOCATED IN PEDESTRIAN AREAS/ADA ACCESSIBLE ROUTES
FINISHED GRADE
BRING TO GRADE WITH BRICK AND MORTAR AS REQUIRED
PROVIDE RISER SECTIONS AS REQD.
STEEL-REINFORCED POLYPROPYLENE PLASTIC STEPS 12" O.C.
30" X 48" I.D. DRAIN INLET AS MANUFACTURED BY "PRECAST CONCRETE SALES CO." OF VALLEY COTTAGE, N.Y. (OR APPROVED EQUAL)
PIPE DIA. VARIES
1'-6" SUMP
2'-0" MAX.
6" MIN. THICK LAYER OF ITEM 4 (TYPE 4- NYSDOT ITEM 304.14) OR 3/4" CRUSHED STONE
6"
4'-0"
6"

NOTES:

1. STEPS REQUIRED IF DEPTH OF STRUCTURE EXCEEDS 4 FEET.
2. STRUCTURE AND GRATE TO BE DESIGNED FOR H-20 LOADING.

30" X 48" DRAIN INLET DETAIL

(N.T.S.)

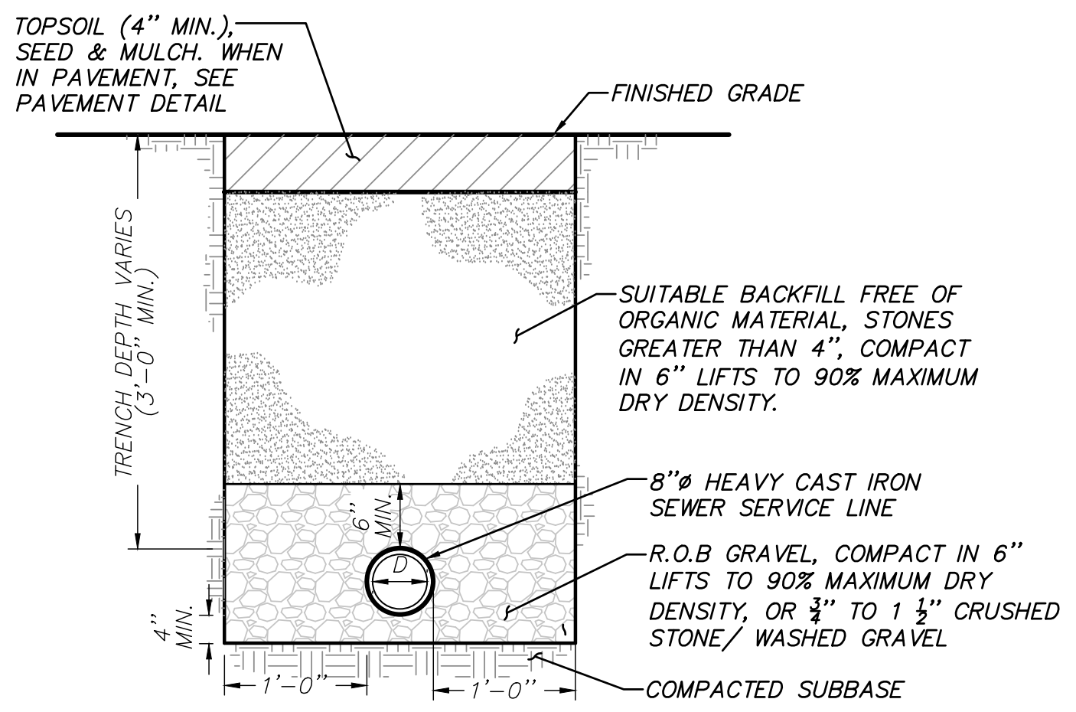
TOPSOIL (4" MIN.), SEED & MULCH. WHEN IN PAVEMENT, SEE PAVEMENT DETAIL
FINISHED GRADE
TRENCH DEPTH VARIES (3'-0" MIN.)
SUITABLE BACKFILL FREE OF ORGANIC MATERIAL, STONES GREATER THAN 4", COMPACT IN 6" LIFTS TO 90% MAXIMUM DRY DENSITY.
6" MIN.
D
8"ø HEAVY CAST IRON SEWER SERVICE LINE
R.O.B GRAVEL, COMPACT IN 6" LIFTS TO 90% MAXIMUM DRY DENSITY, OR ¾" TO 1 ½" CRUSHED STONE/ WASHED GRAVEL
4" MIN.
1'-0"
1'-0"
COMPACTED SUBBASE

SEWER SERVICE LINE TRENCH DETAIL

(N.T.S.)

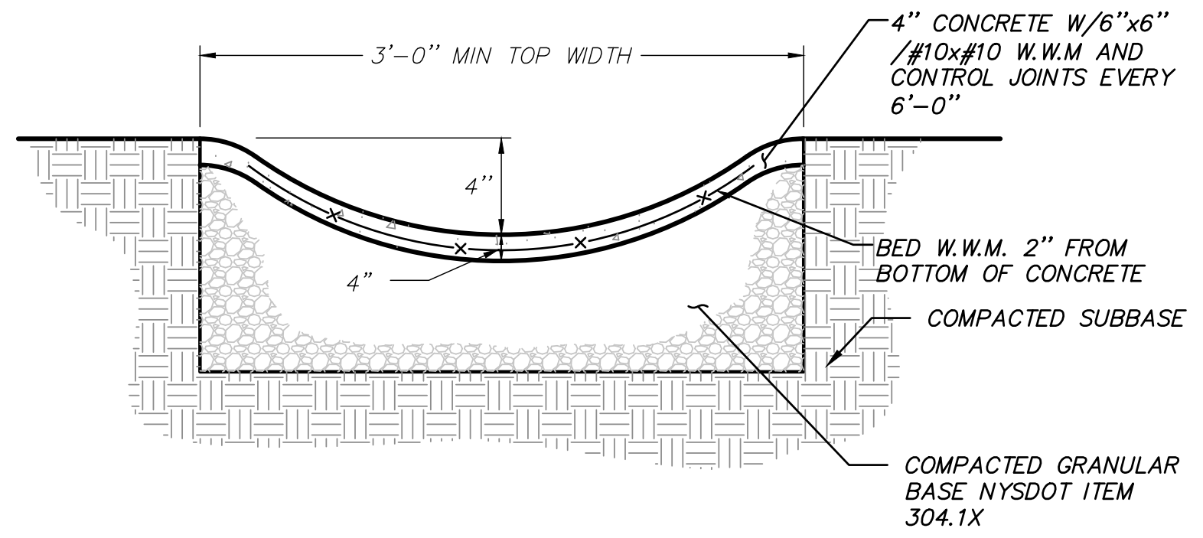
3'-0" MIN TOP WIDTH
4" CONCRETE W/6"x6" /#10x#10 W.W.M AND CONTROL JOINTS EVERY 6'-0"
4"
4"
BED W.W.M. 2" FROM BOTTOM OF CONCRETE
COMPACTED SUBBASE
COMPACTED GRANULAR BASE NYSDOT ITEM 304.1X

CONCRETE SWALE DETAIL

(N.T.S.)

ALTERATION OF THIS DOCUMENT, UNLESS UNDER THE DIRECTION OF A LICENSED PROFESSIONAL ENGINEER, IS A VIOLATION OF SECTION 7209 OF ARTICLE 145 OF THE EDUCATION LAW.

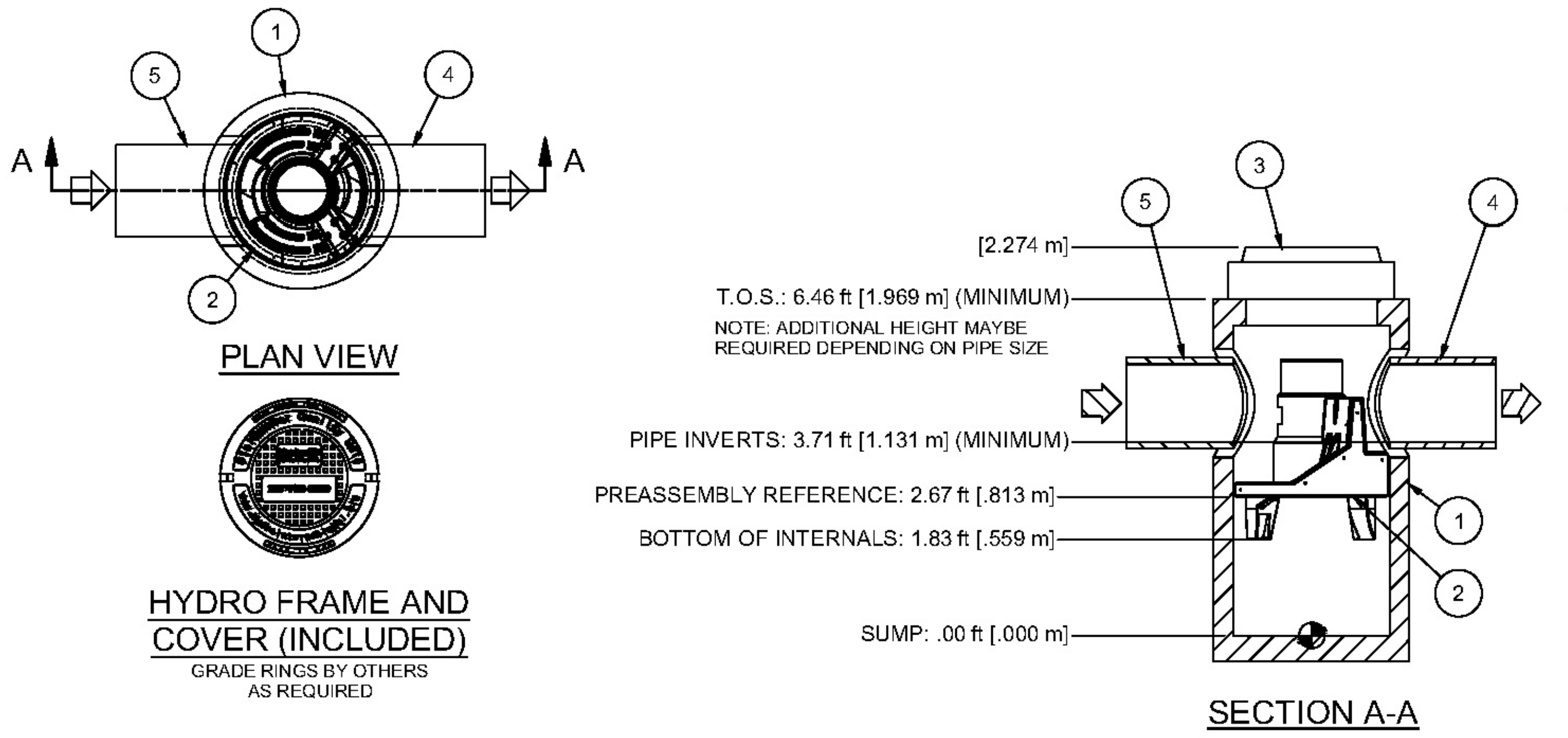
1
2
3
4
5
A
A
PLAN VIEW
HYDRO FRAME AND COVER (INCLUDED)
GRADE RINGS BY OTHERS AS REQUIRED
[2.274 m]
T.O.S.: 6.46 ft [1.969 m] (MINIMUM)
NOTE: ADDITIONAL HEIGHT MAYBE REQUIRED DEPENDING ON PIPE SIZE
PIPE INVERTS: 3.71 ft [1.131 m] (MINIMUM)
PREASSEMBLY REFERENCE: 2.67 ft [.813 m]
BOTTOM OF INTERNALS: 1.83 ft [.559 m]
SUMP: .00 ft [.000 m]
SECTION A-A

PRODUCT SPECIFICATION:

1. PEAK HYDRAULIC FLOW: 15.0 cfs (424 l/s)
2. MIN SEDIMENT STORAGE CAPACITY: 0.4 cu. yd. (0.3 cu. m.)
3. OIL STORAGE CAPACITY: 125 gal. (473 liters)
4. MAXIMUM INLET/OUTLET PIPE DIAMETERS: 18 in. (450 mm)
5. THE TREATMENT SYSTEM SHALL USE AN INDUCED VORTEX TO SEPARATE POLLUTANTS FROM STORMWATER RUNOFF.
6. FOR MORE PRODUCT INFORMATION INCLUDING REGULATORY ACCEPTANCES, PLEASE VISIT https://hydro-int.com/en/products/first-defense

HYDRO INTERNATIONAL 3-FT FIRST DEFENSE HC HYDRODYNAMIC SEPARATOR DETAIL

(N.T.S.)

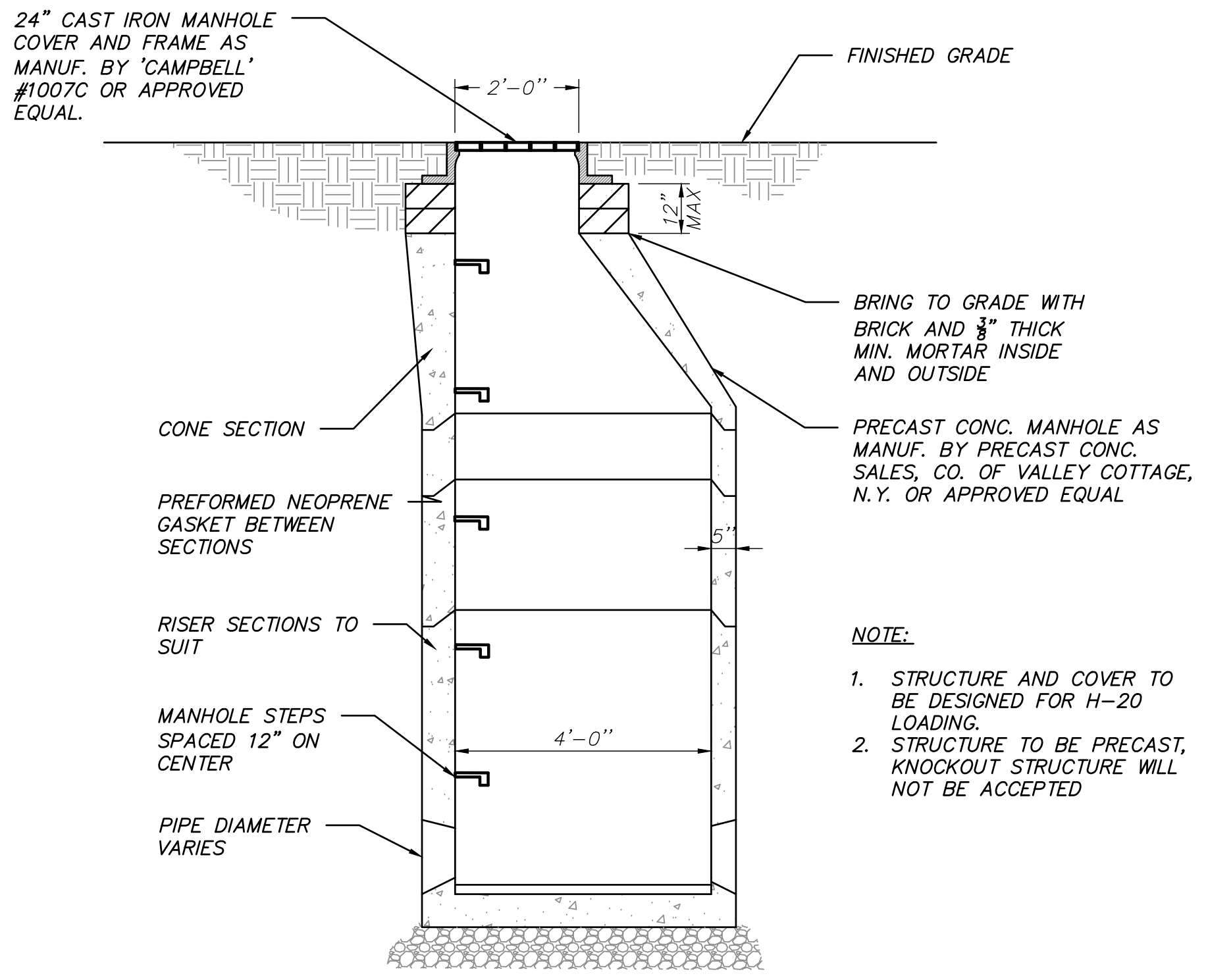
24" CAST IRON MANHOLE COVER AND FRAME AS MANUF. BY 'CAMPBELL' #1007C OR APPROVED EQUAL.
2'-0"
FINISHED GRADE
12" MAX
BRING TO GRADE WITH BRICK AND ⅜" THICK MIN. MORTAR INSIDE AND OUTSIDE
CONE SECTION
PRECAST CONC. MANHOLE AS MANUF. BY PRECAST CONC. SALES, CO. OF VALLEY COTTAGE, N.Y. OR APPROVED EQUAL
PREFORMED NEOPRENE GASKET BETWEEN SECTIONS
5"
RISER SECTIONS TO SUIT
MANHOLE STEPS SPACED 12" ON CENTER
4'-0"
PIPE DIAMETER VARIES

NOTE:

1. STRUCTURE AND COVER TO BE DESIGNED FOR H-20 LOADING.
2. STRUCTURE TO BE PRECAST, KNOCKOUT STRUCTURE WILL NOT BE ACCEPTED

DRAINAGE MANHOLE DETAIL

(N.T.S.)

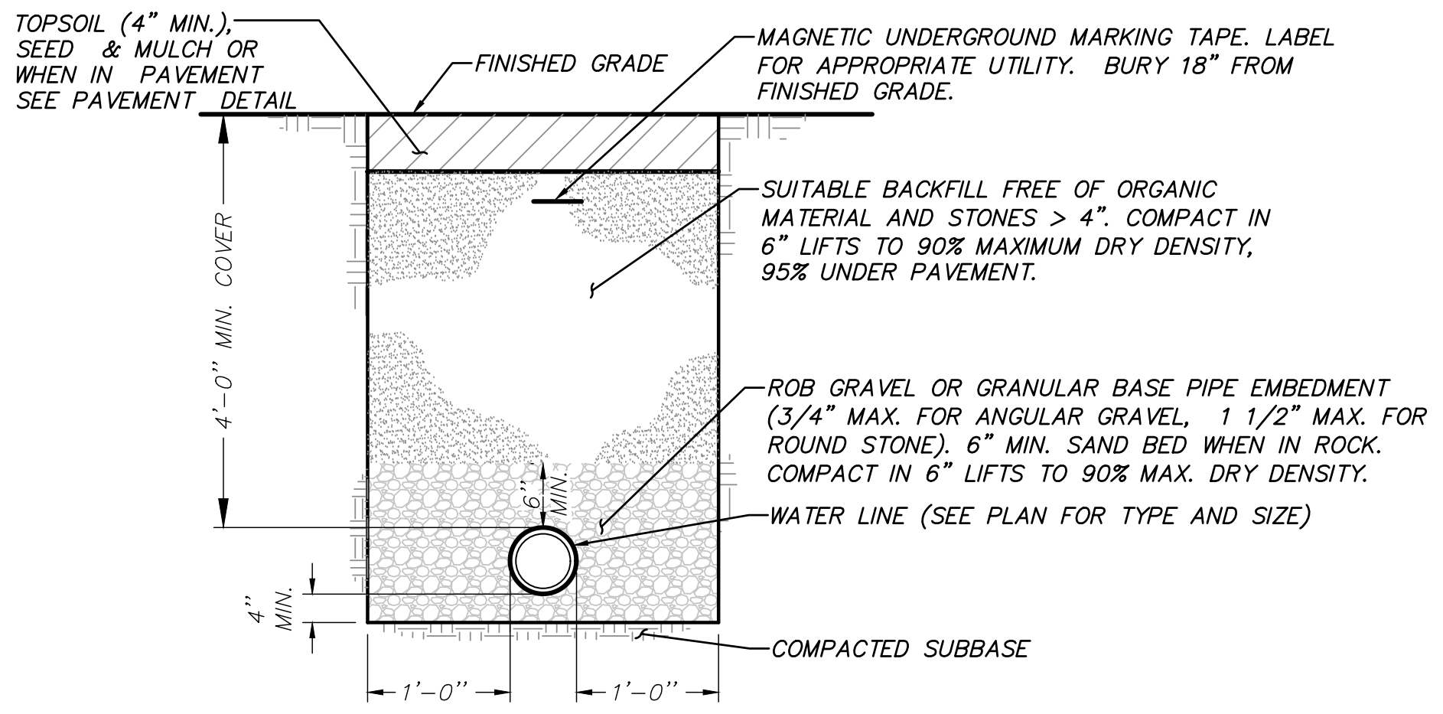
TOPSOIL (4" MIN.), SEED & MULCH OR WHEN IN PAVEMENT SEE PAVEMENT DETAIL
FINISHED GRADE
MAGNETIC UNDERGROUND MARKING TAPE. LABEL FOR APPROPRIATE UTILITY. BURY 18" FROM FINISHED GRADE.
SUITABLE BACKFILL FREE OF ORGANIC MATERIAL AND STONES > 4". COMPACT IN 6" LIFTS TO 90% MAXIMUM DRY DENSITY, 95% UNDER PAVEMENT.
4'-0" MIN. COVER
ROB GRAVEL OR GRANULAR BASE PIPE EMBEDMENT (3/4" MAX. FOR ANGULAR GRAVEL, 1 1/2" MAX. FOR ROUND STONE). 6" MIN. SAND BED WHEN IN ROCK. COMPACT IN 6" LIFTS TO 90% MAX. DRY DENSITY.
6" MIN.
WATER LINE (SEE PLAN FOR TYPE AND SIZE)
4" MIN.
COMPACTED SUBBASE
1'-0"
1'-0"

WATER LINE TRENCH DETAIL

(N.T.S)

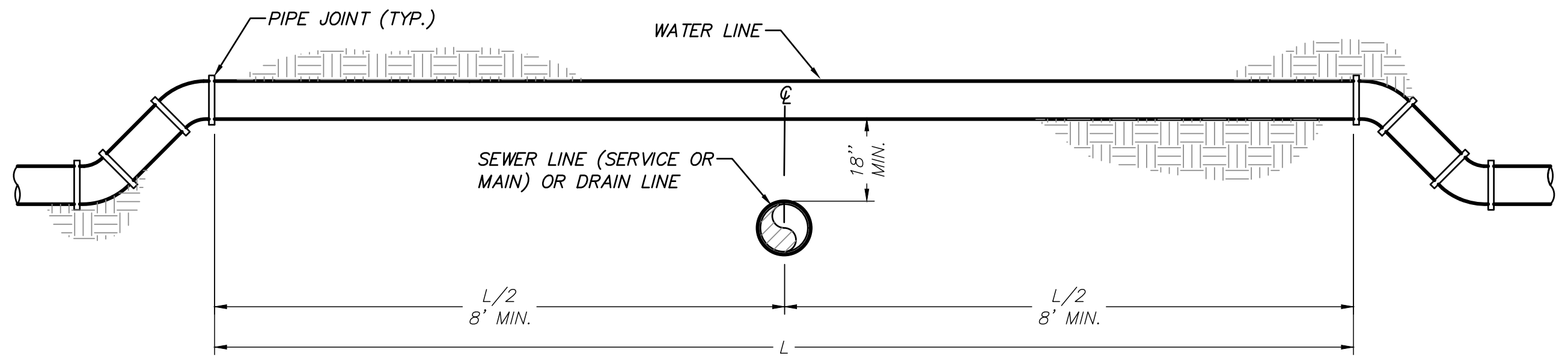
PIPE JOINT (TYP.)
WATER LINE
℄
SEWER LINE (SERVICE OR MAIN) OR DRAIN LINE
18" MIN.
L/2 8' MIN.
L/2 8' MIN.
L

WATER LINE CROSSING OVER SANITARY SEWER LINE OR STORM DRAIN LINE

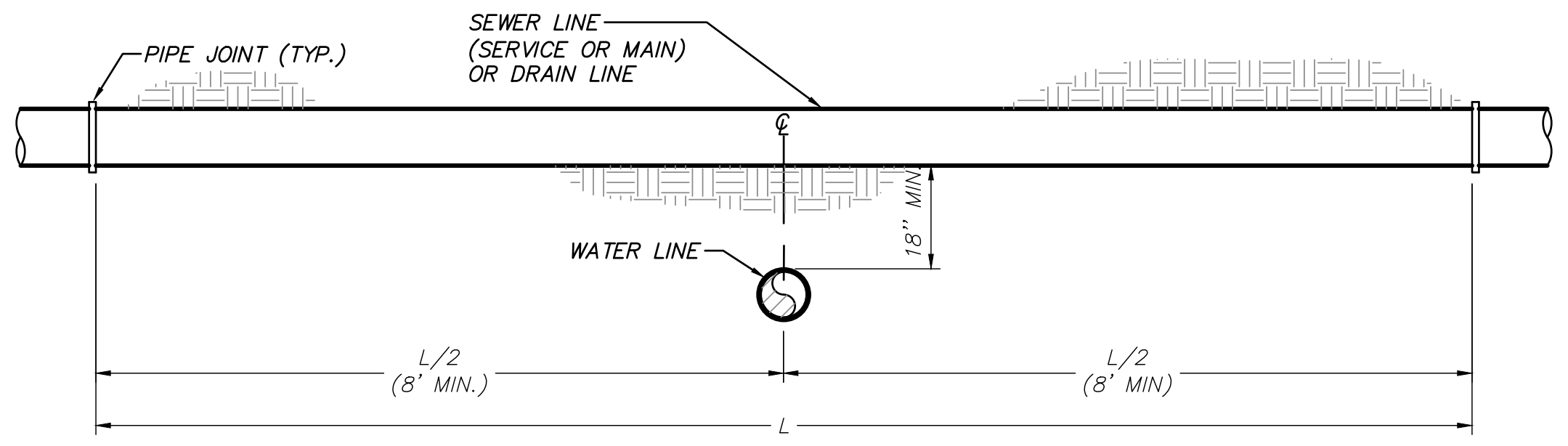
PIPE JOINT (TYP.)
SEWER LINE (SERVICE OR MAIN) OR DRAIN LINE
℄
WATER LINE
18" MIN
L/2 (8' MIN.)
L/2 (8' MIN)
L

WATER LINE CROSSING UNDER SANITARY SEWER LINE OR STORM DRAIN LINE

NOTES:

1. WHEN 18" SEPARATION CANNOT BE MAINTAINED, THE WATER LINE SHALL BE ENCASED IN CONCRETE (SEE DETAIL) ONLY WITH PRIOR APPROVAL OF THE DESIGN ENGINEER AND DEPARTMENT OF HEALTH.
2. PROVIDE PIPE AND FITTING RESTRAINT AS REQUIRED.
3. THE 18" SEPARATION APPLIES TO WATER MAINS AND WATER SERVICE CONNECTIONS.

WATER LINE CROSSING DETAIL

(N.T.S.)

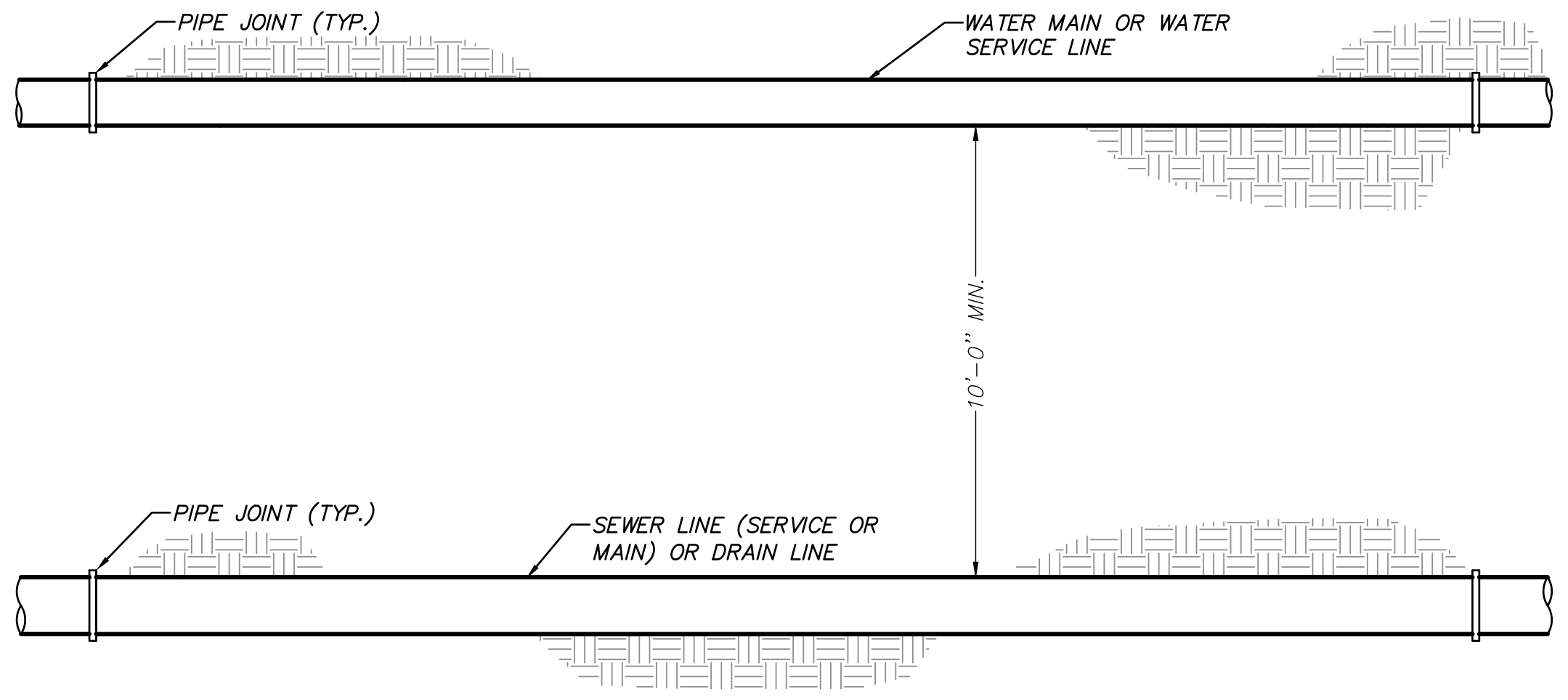
PIPE JOINT (TYP.)
WATER MAIN OR WATER SERVICE LINE
10'-0" MIN.
PIPE JOINT (TYP.)
SEWER LINE (SERVICE OR MAIN) OR DRAIN LINE

NOTES:

1. WHEN THE 10' SEPARATION CANNOT BE MAINTAINED, THE WATER LINE SHALL BE ENCASED IN CONCRETE (SEE DETAIL) ONLY WITH PRIOR APPROVAL OF THE DESIGN ENGINEER AND DEPARTMENT OF HEALTH.
2. THE 10' SEPARATION APPLIES TO WATER MAINS AND WATER SERVICE CONNECTIONS.

WATER LINE HORIZONTAL SEPARATION DETAIL

(N.T.S.)

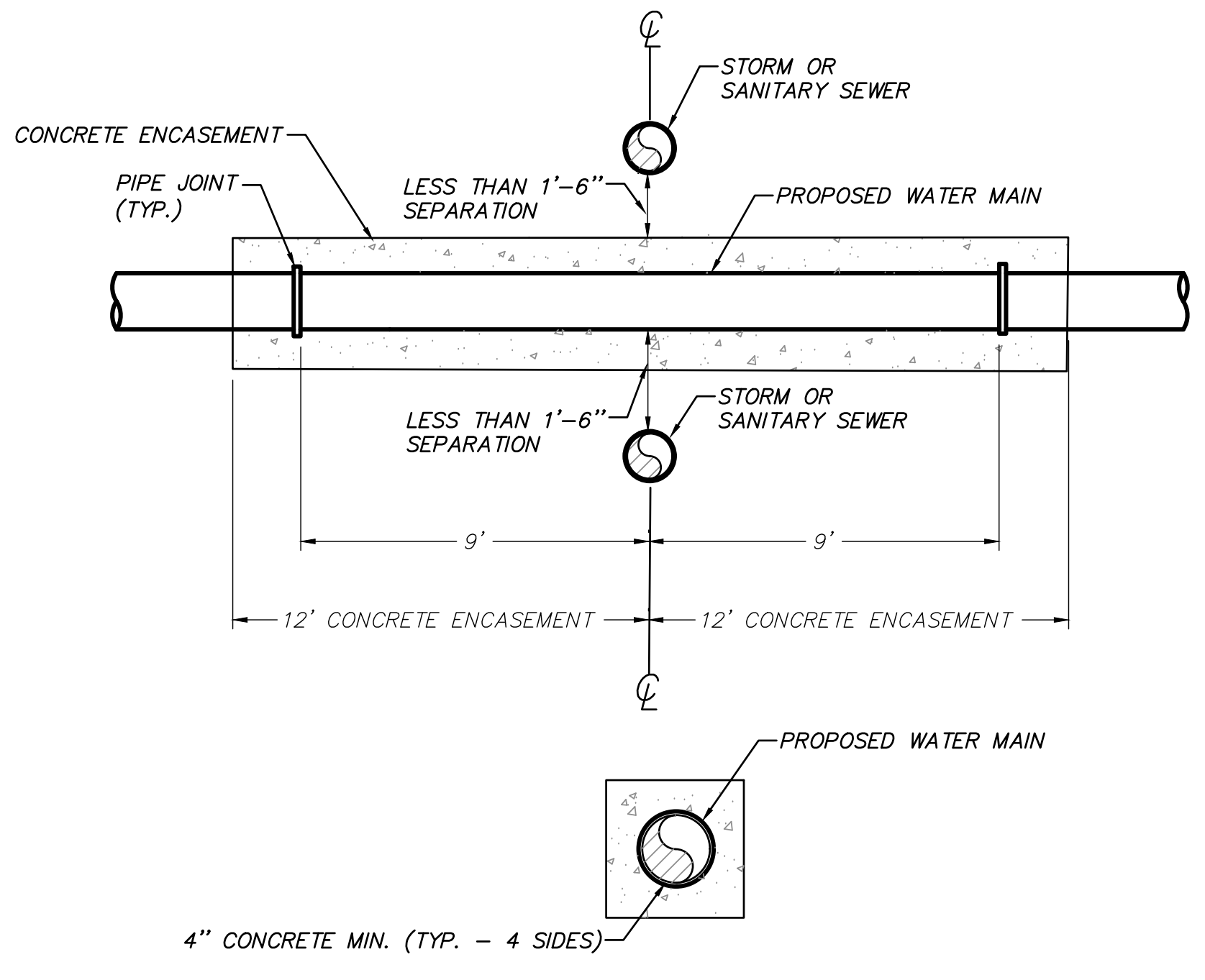
℄
STORM OR SANITARY SEWER
CONCRETE ENCASEMENT
PIPE JOINT (TYP.)
LESS THAN 1'-6" SEPARATION
PROPOSED WATER MAIN
LESS THAN 1'-6" SEPARATION
STORM OR SANITARY SEWER
9'
9'
12' CONCRETE ENCASEMENT
12' CONCRETE ENCASEMENT
℄
PROPOSED WATER MAIN
4" CONCRETE MIN. (TYP. - 4 SIDES)

WATER MAIN CONCRETE ENCASEMENT DETAIL

(N.T.S)

NOTE: CONCRETE ENCASEMENT IS ONLY TO BE USED WHEN 18" MINIMUM SEPARATION IS NOT POSSIBLE. CONCRETE ENCASEMENT REQUIRES PRIOR APPROVAL BY THE DESIGN ENGINEER & THE DEPARTMENT OF HEALTH.

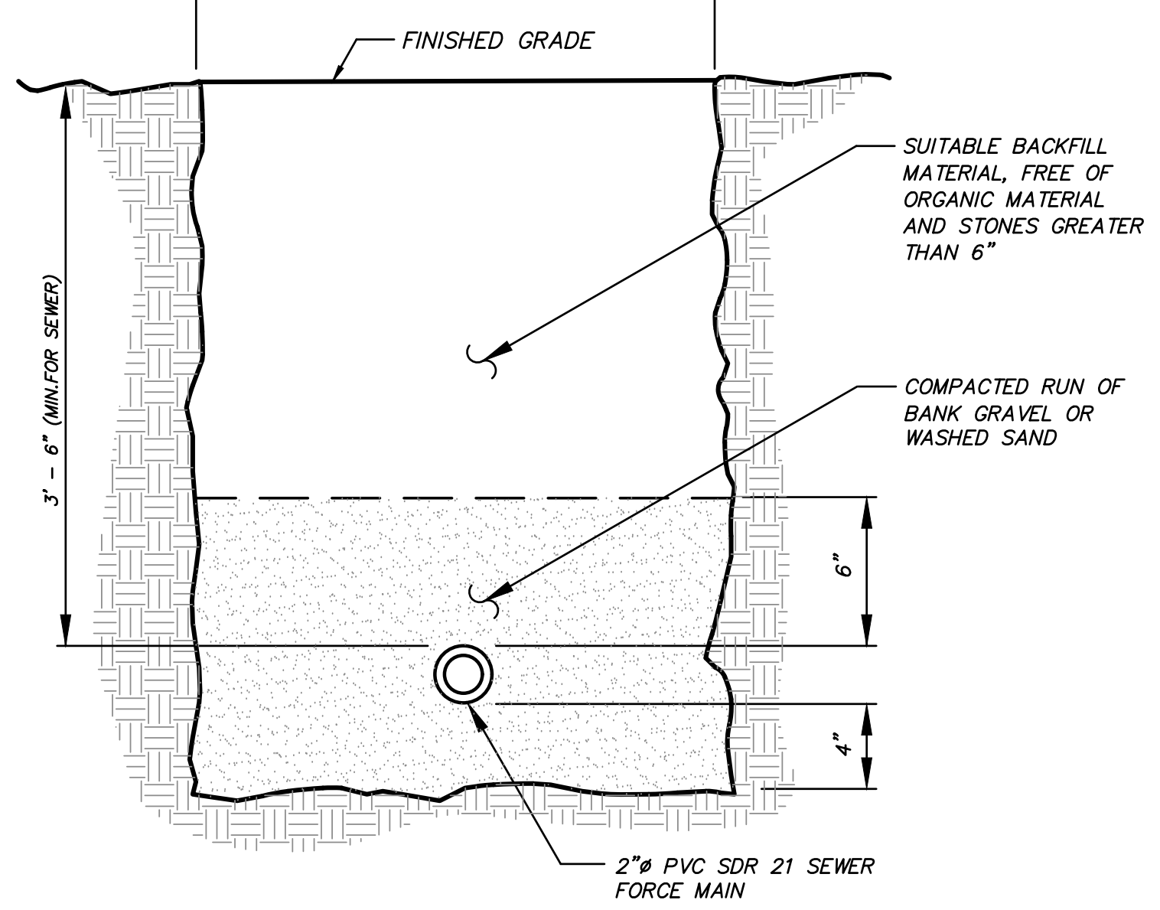
2'-0"
FINISHED GRADE
SUITABLE BACKFILL MATERIAL, FREE OF ORGANIC MATERIAL AND STONES GREATER THAN 6"
3' - 6" (MIN.FOR SEWER)
COMPACTED RUN OF BANK GRAVEL OR WASHED SAND
6"
4"
2"ø PVC SDR 21 SEWER FORCE MAIN

SEWER FORCE MAIN TRENCH DETAIL

(N.T.S.)

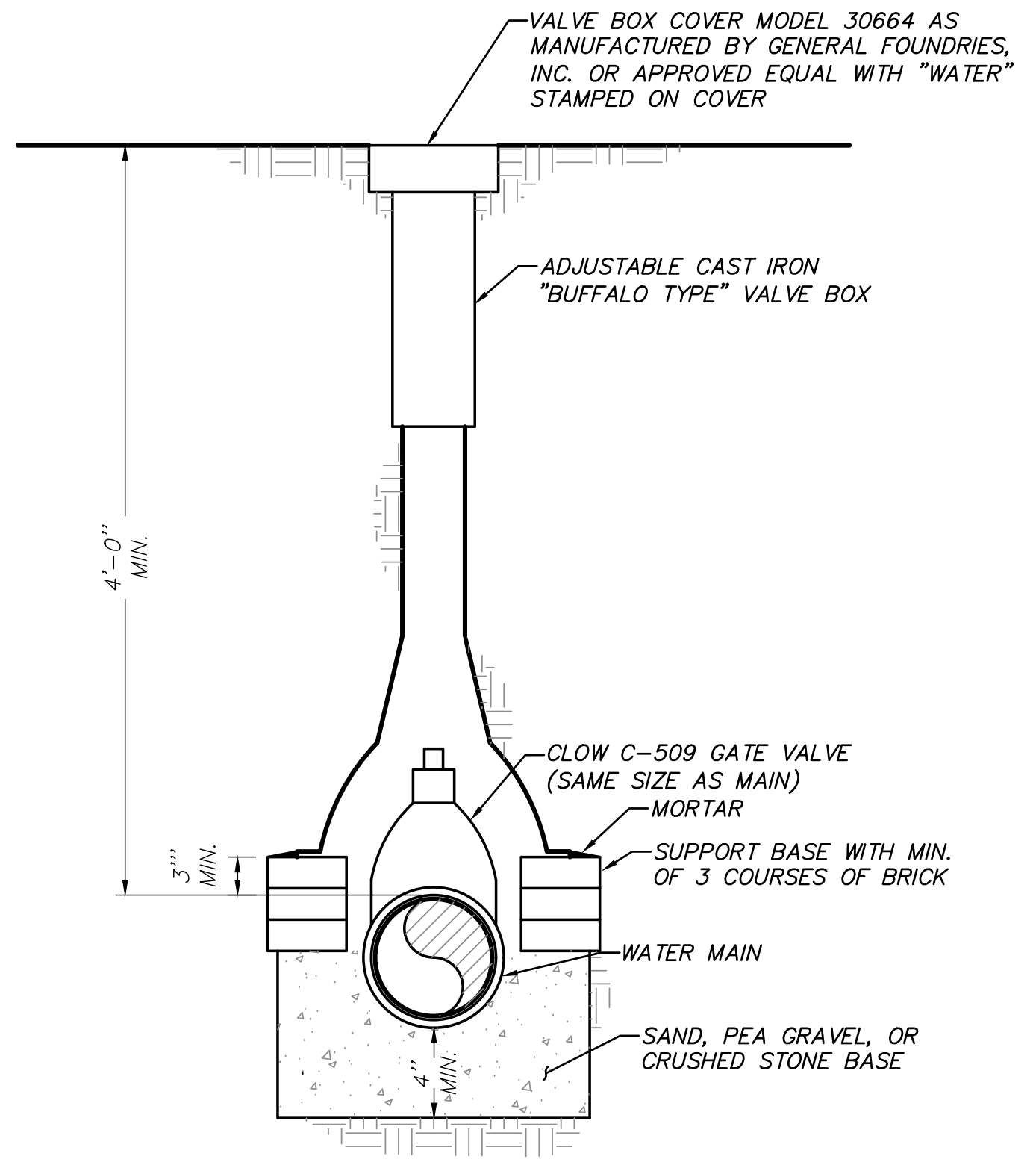
VALVE BOX COVER MODEL 30664 AS MANUFACTURED BY GENERAL FOUNDRIES, INC. OR APPROVED EQUAL WITH "WATER" STAMPED ON COVER
ADJUSTABLE CAST IRON "BUFFALO TYPE" VALVE BOX
4'-0" MIN.
CLOW C-509 GATE VALVE (SAME SIZE AS MAIN)
MORTAR
3"' MIN.
SUPPORT BASE WITH MIN. OF 3 COURSES OF BRICK
WATER MAIN
SAND, PEA GRAVEL, OR CRUSHED STONE BASE
4" MIN.

WATER MAIN GATE VALVE DETAIL

(N.T.S.)

NO.	DATE	REVISION	BY
2	2-26-25	REVISED PER VILLAGE COMMENTS	NFB
1	9-24-24	REVISED PER VILLAGE COMMENTS	NFB

INSITE
ENGINEERING, SURVEYING & LANDSCAPE ARCHITECTURE, P.C.

3 Garrett Place
Carmel, NY 10512
(845) 225-9690
(845) 225-9717 fax
www.insite-eng.com

PROJECT:

WB CROTON POINT

CROTON POINT AVE. & VETERANS PLAZA, VILLAGE OF CROTON-ON-HUDSON, WESTCHESTER CO., NY

DRAWING:

DETAILS

RICHARD D. WILLIAMS JR.
085866

PROJECT NUMBER	24154.100	PROJECT MANAGER	R.D.W.
DATE	7-11-24	DRAWN BY	M.E.U.
SCALE	AS SHOWN	CHECKED BY	D.L.M.

DRAWING NO.
D-3

SHEET
9
10

Z:\E\24154100 WBP Croton Point Ave\07 D-1.dwg, 2/26/2025 8:47:12 AM, nblau, 1:1

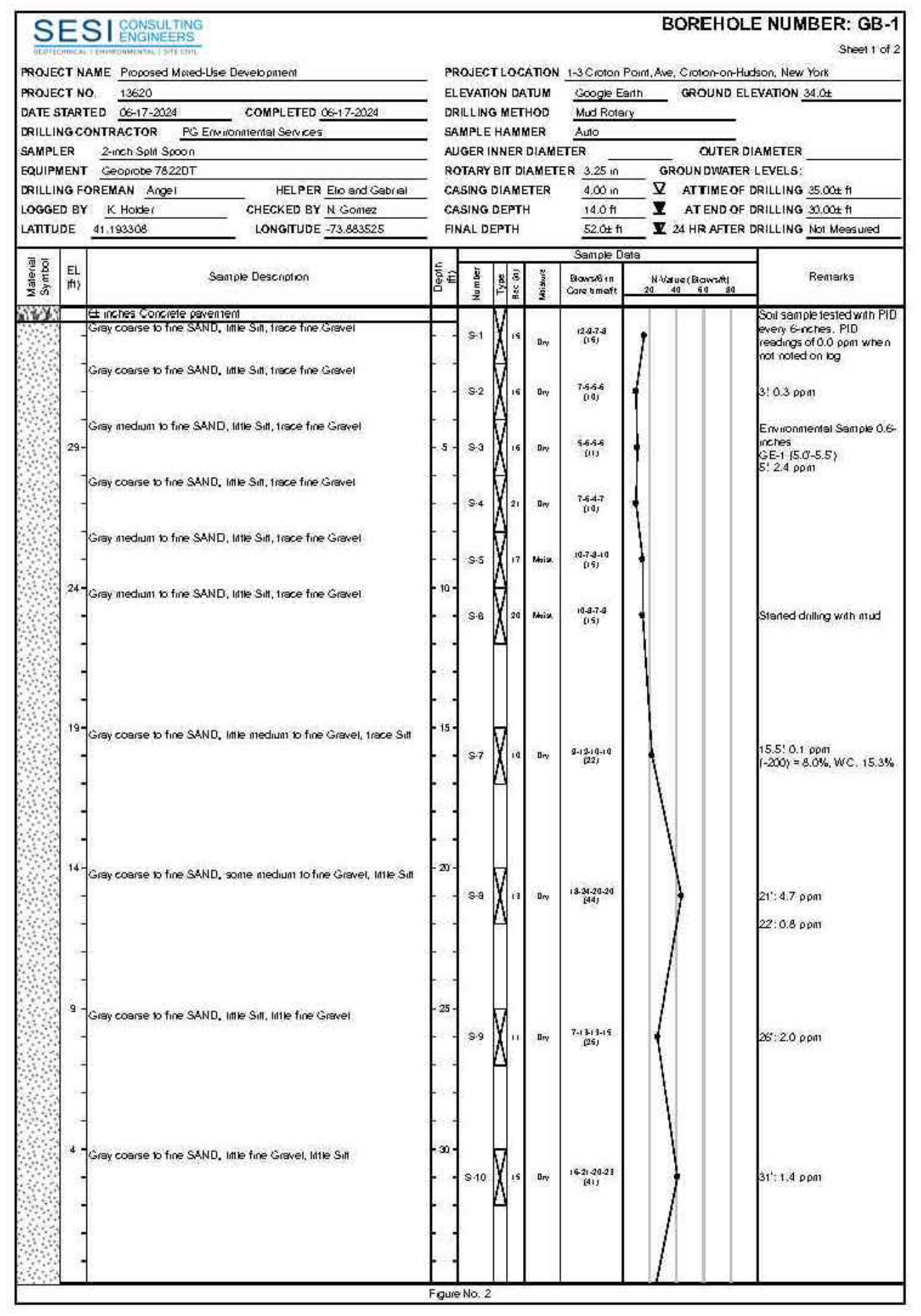
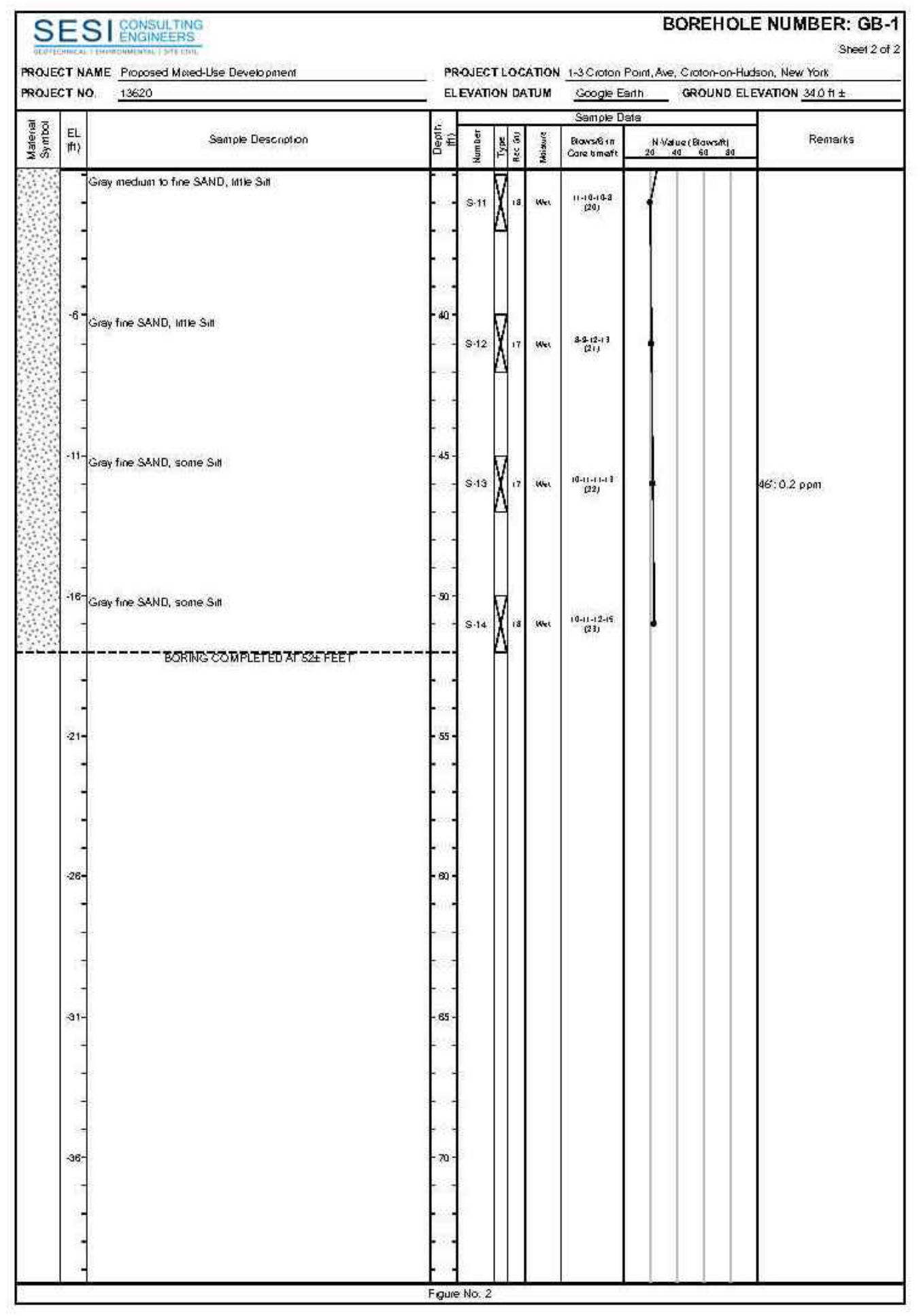
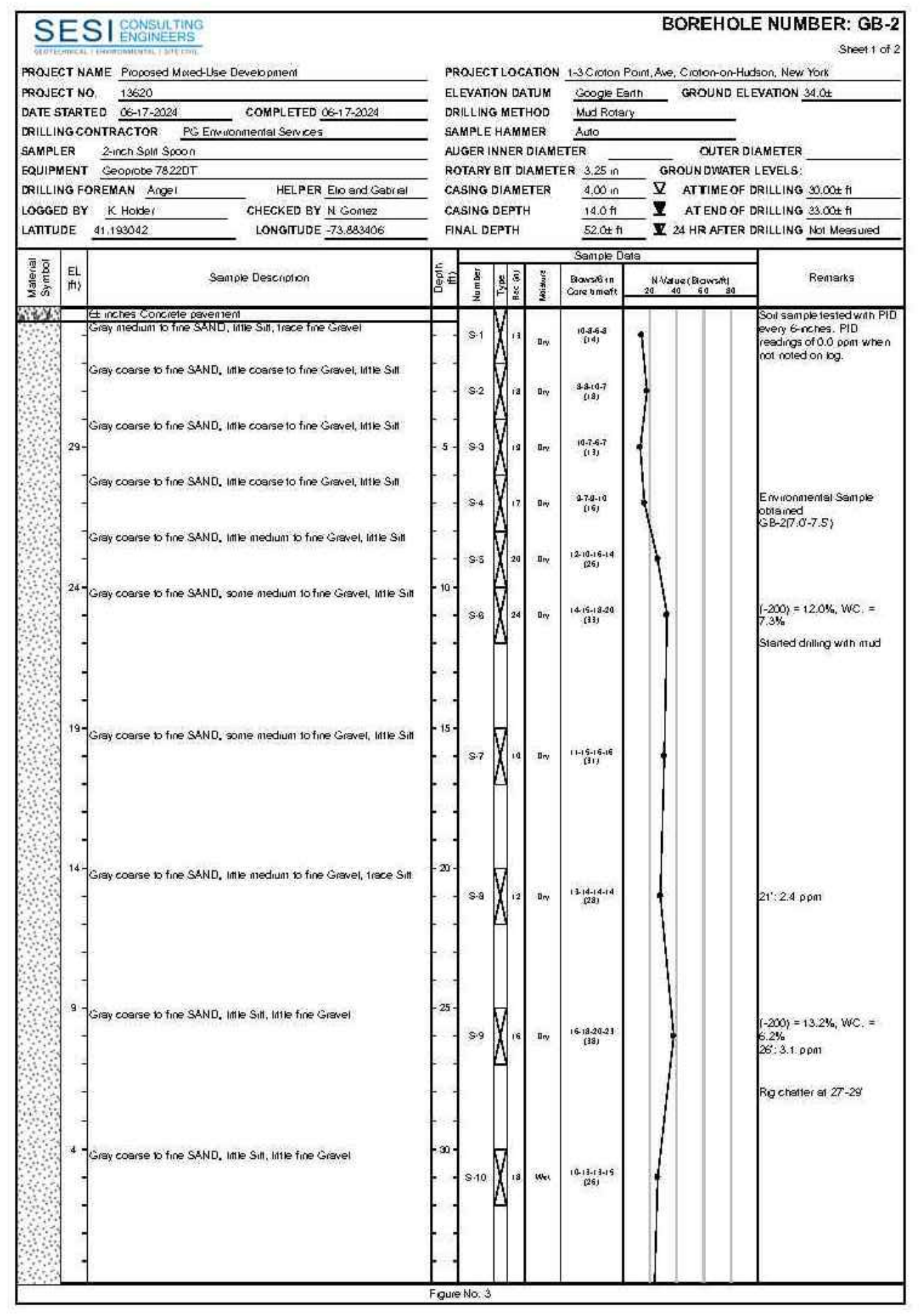
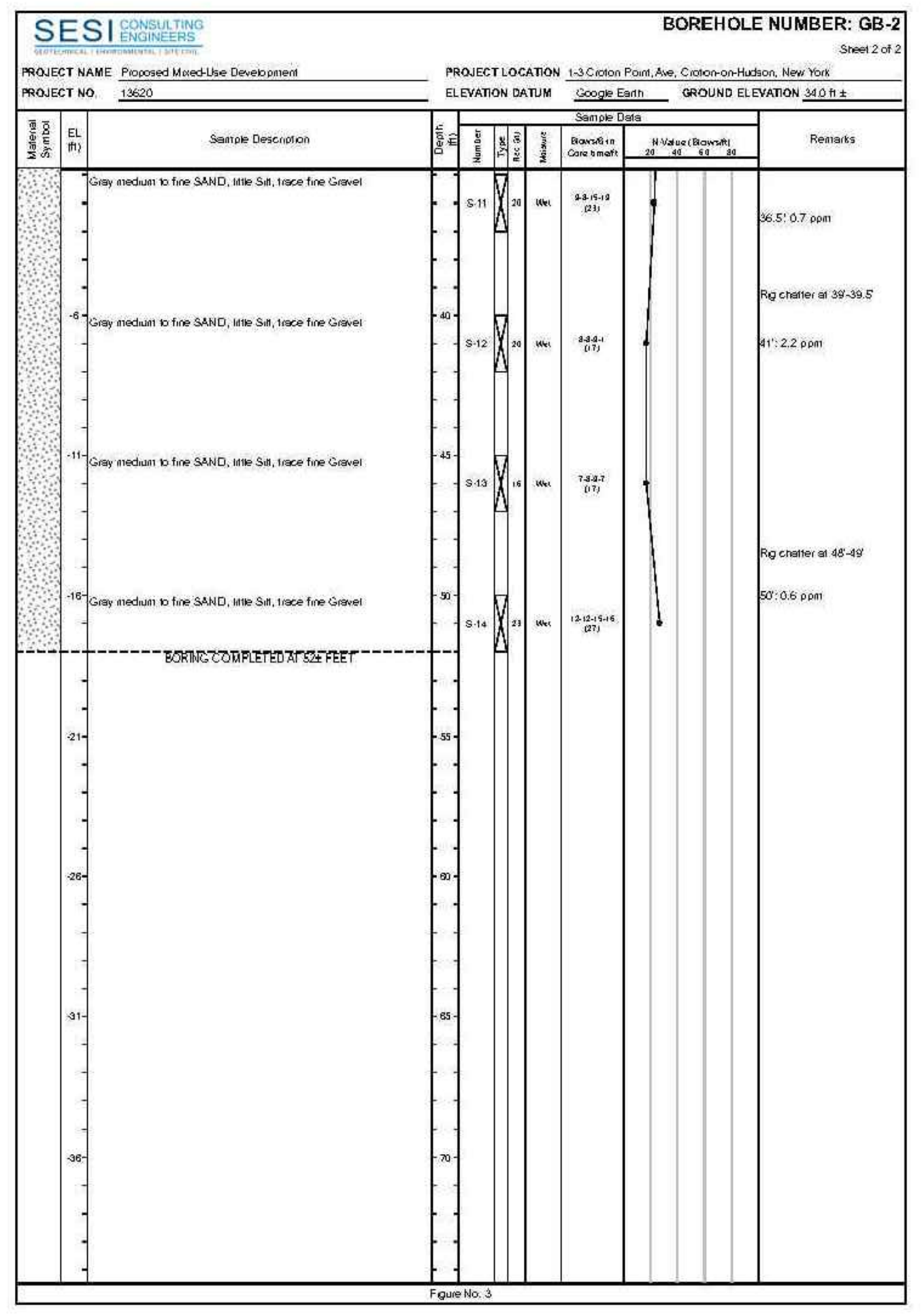
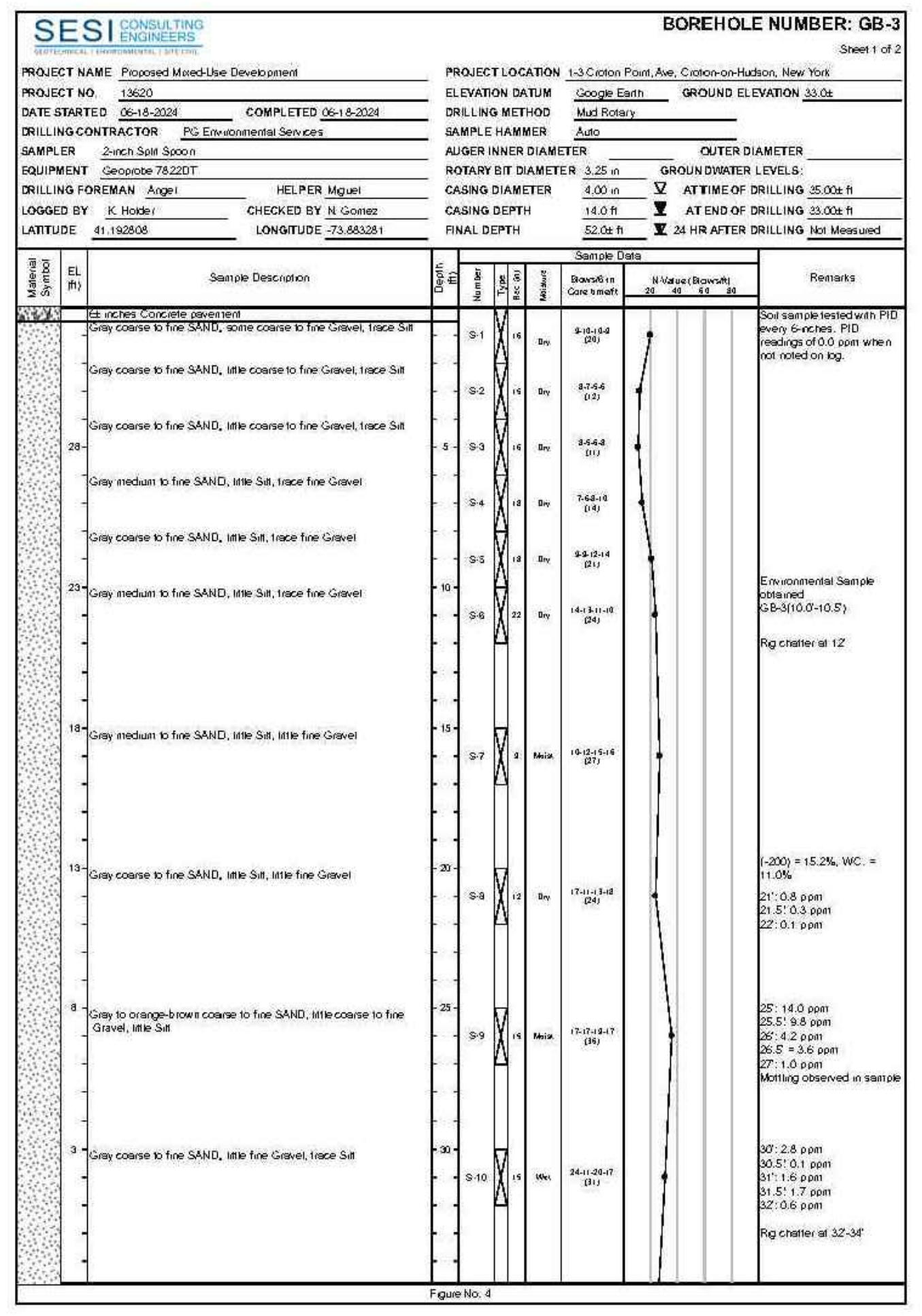
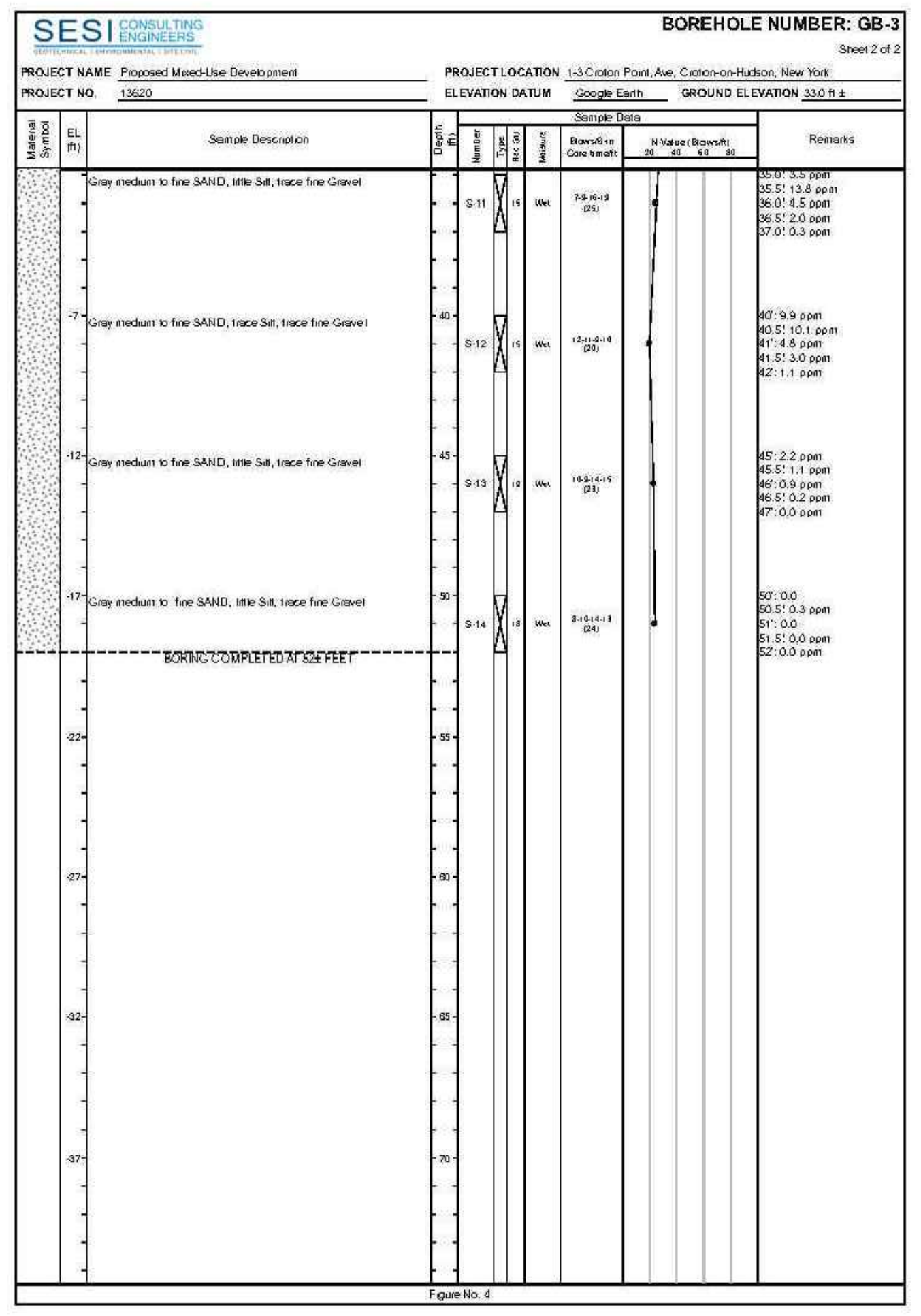
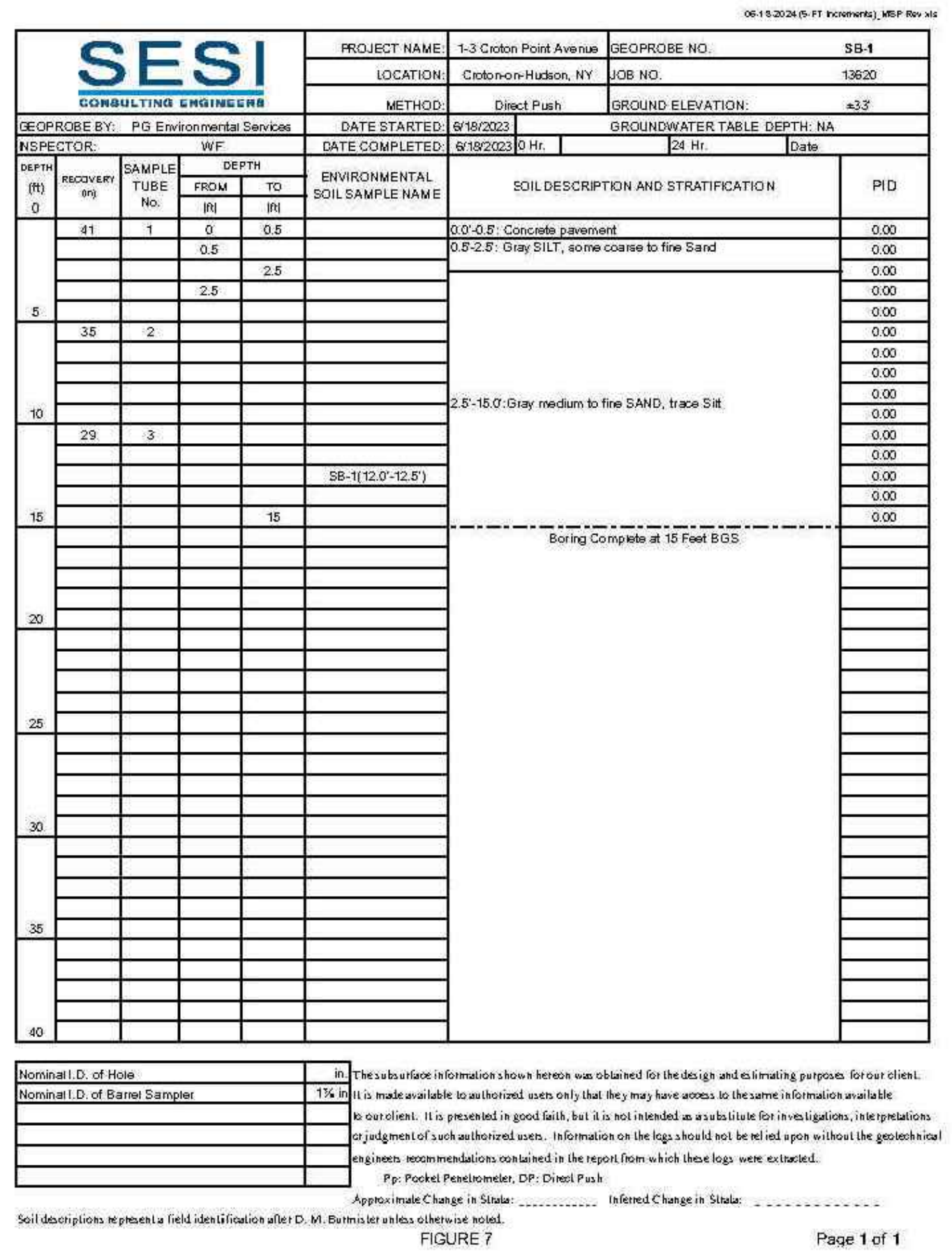

06-18-2024 (5-FT Increments)_MSP Rev.xls

SESI CONSULTING ENGINEERS	PROJECT NAME:	1-3 Croton Point Avenue	GEOPROBE NO.	SB-1
	LOCATION:	Croton-on-Hudson, NY	JOB NO.	13620
	METHOD:	Direct Push	GROUND ELEVATION:	±33'
GEOPROBE BY: PG Environmental Services	DATE STARTED:	6/18/2023	GROUNDWATER TABLE DEPTH: NA	
INSPECTOR: WF	DATE COMPLETED:	6/18/2023	0 Hr. / 24 Hr.	Date

DEPTH (ft)	RECOVERY (in)	SAMPLE TUBE No.	DEPTH FROM (ft)	DEPTH TO (ft)	ENVIRONMENTAL SOIL SAMPLE NAME	SOIL DESCRIPTION AND STRATIFICATION	PID
0	41	1	0	0.5		0.0'-0.5': Concrete pavement	0.00
			0.5			0.5'-2.5': Gray SILT, some coarse to fine Sand	0.00
				2.5			0.00
			2.5			2.5'-15.0': Gray medium to fine SAND, trace Silt	0.00
5							0.00
	35	2					0.00
							0.00
							0.00
							0.00
10							0.00
	29	3					0.00
							0.00
					SB-1(12.0'-12.5')		0.00
							0.00
15				15		Boring Complete at 15 Feet BGS	0.00
20							
25							
30							
35							
40							

FIGURE 7 Page 1 of 1

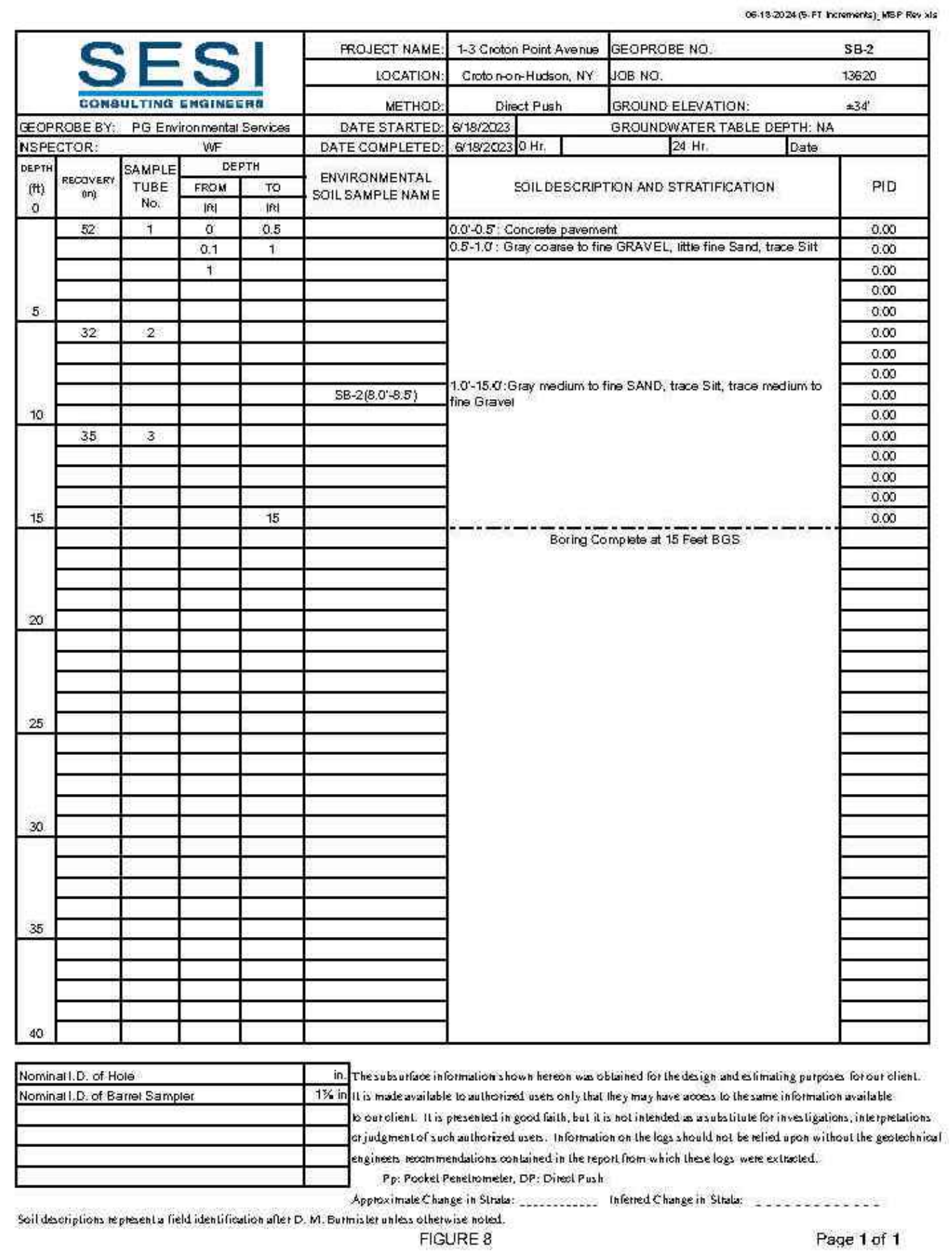
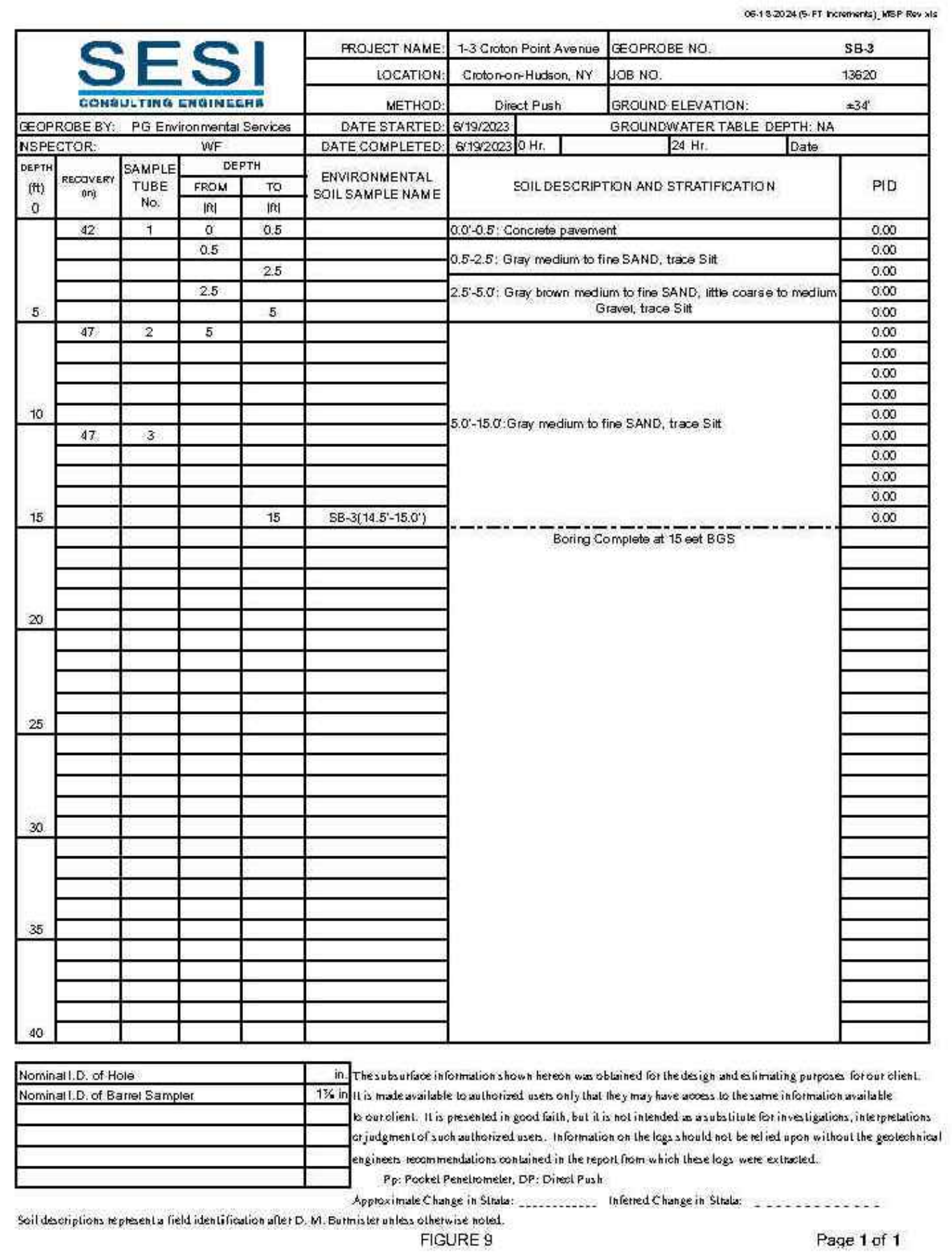
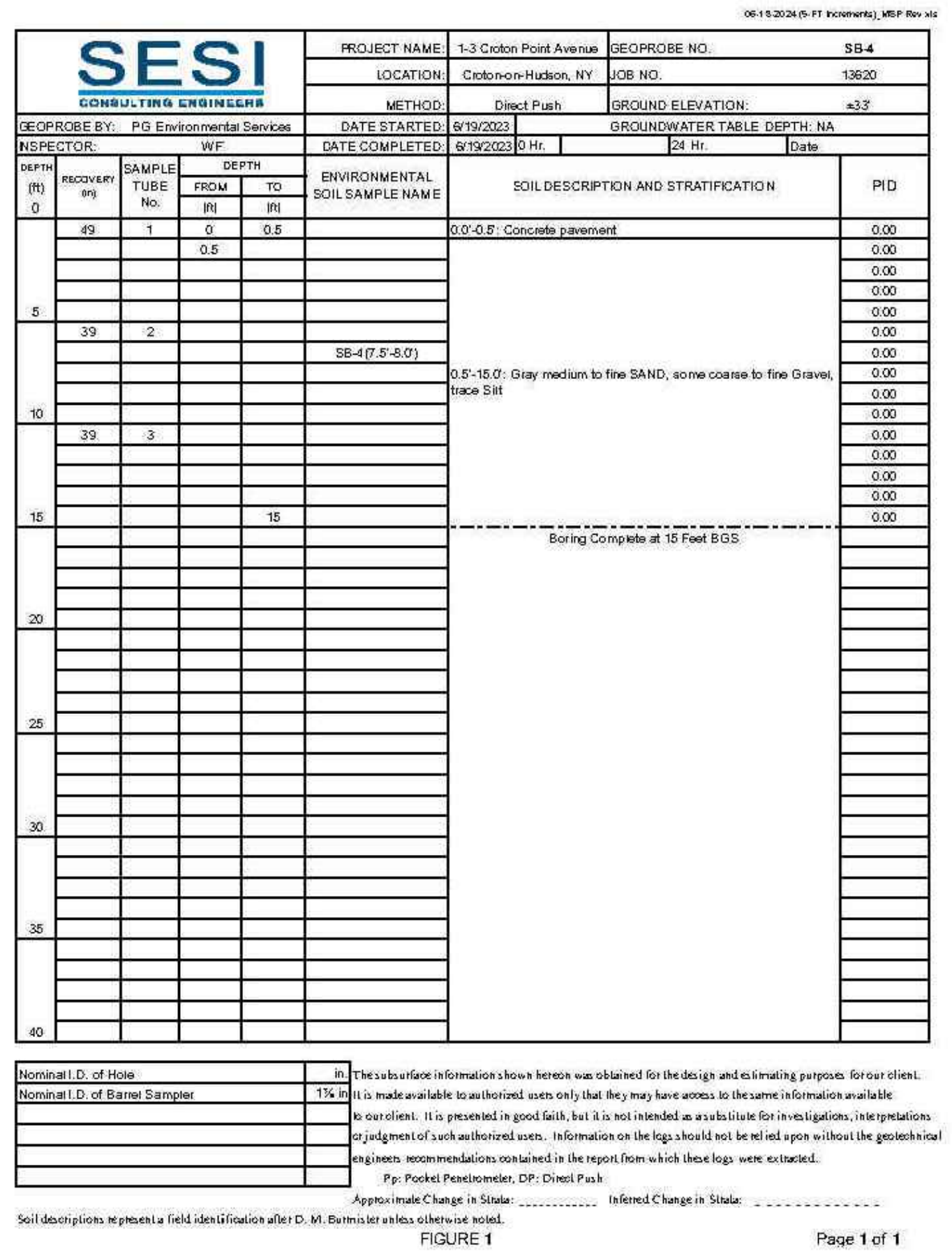
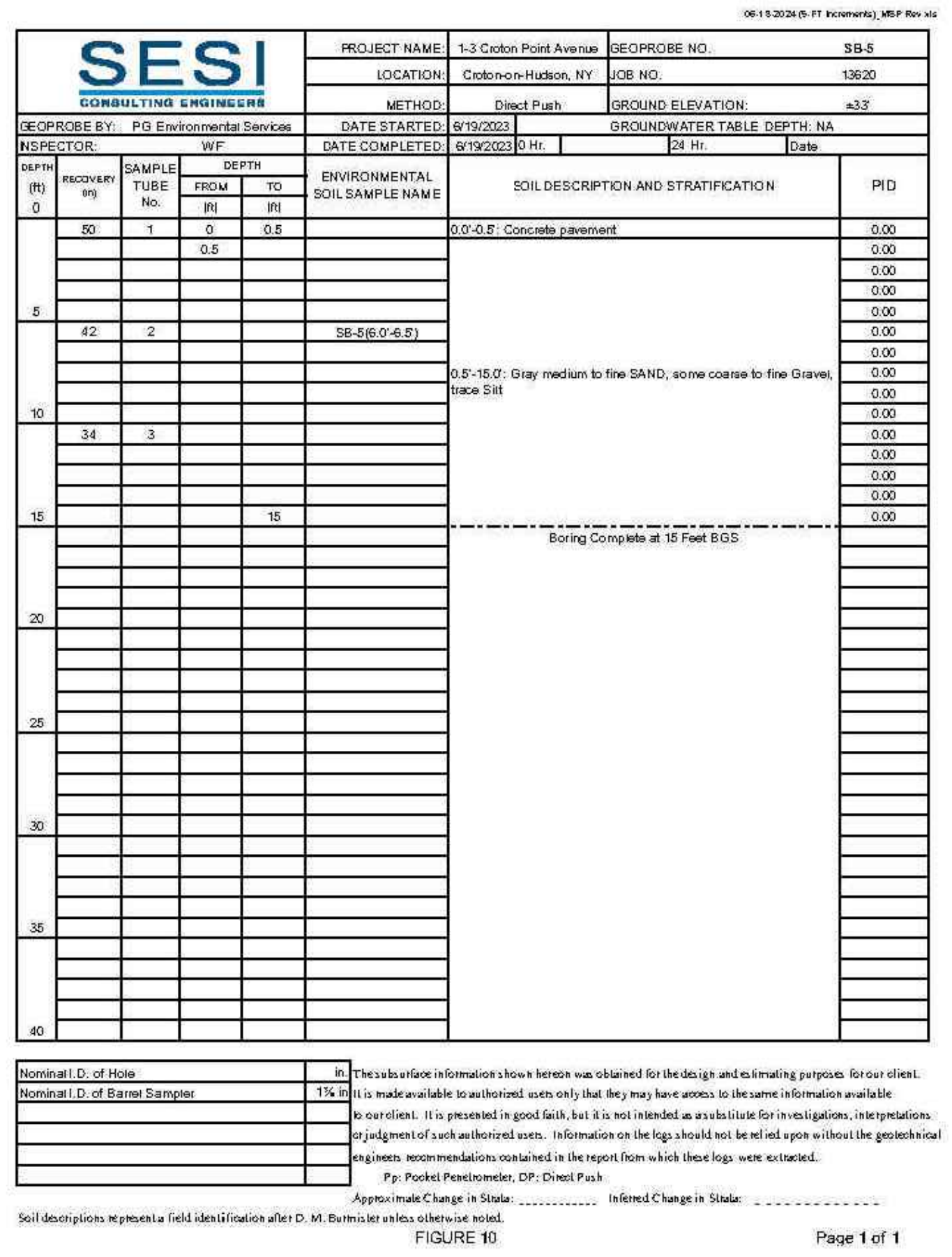
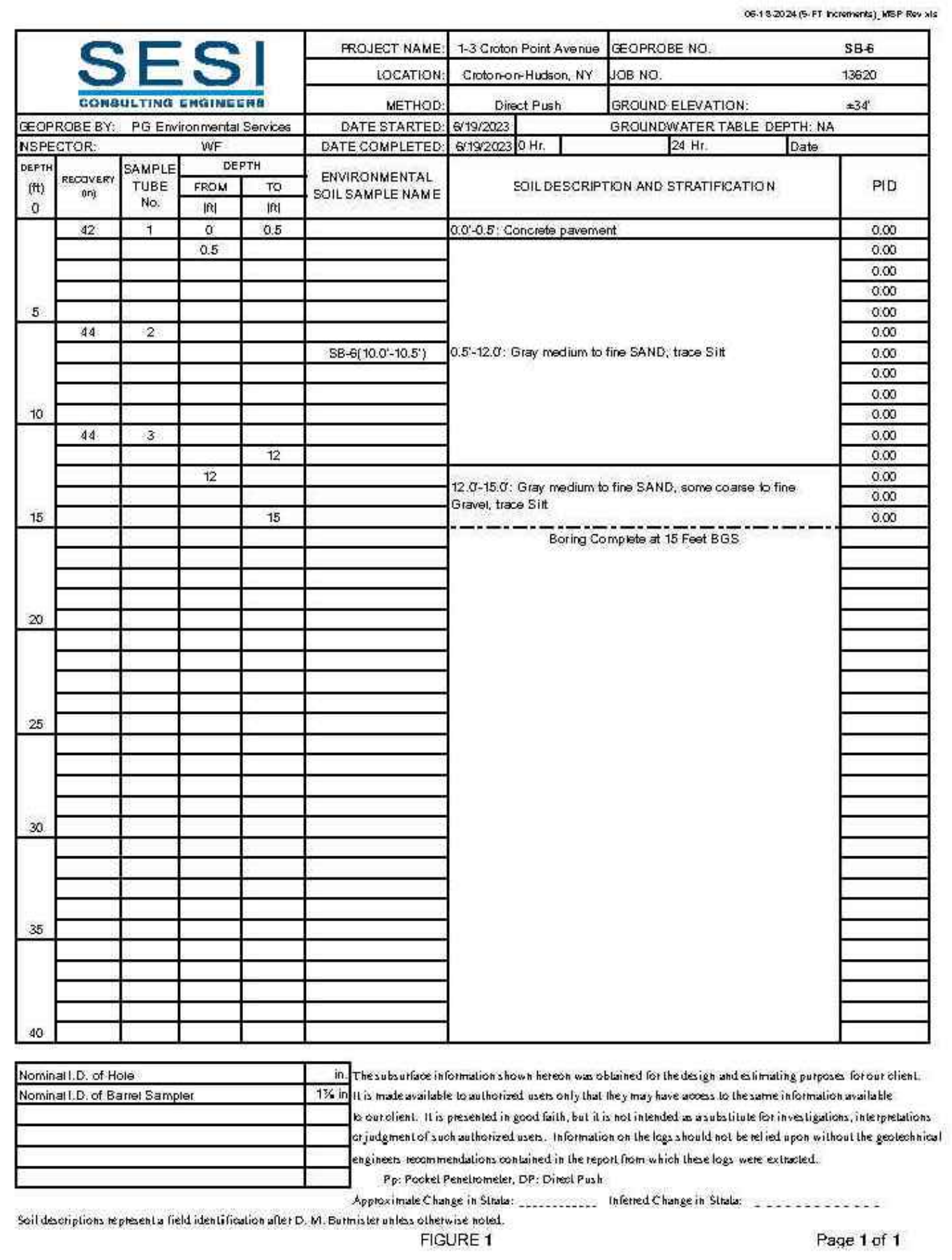
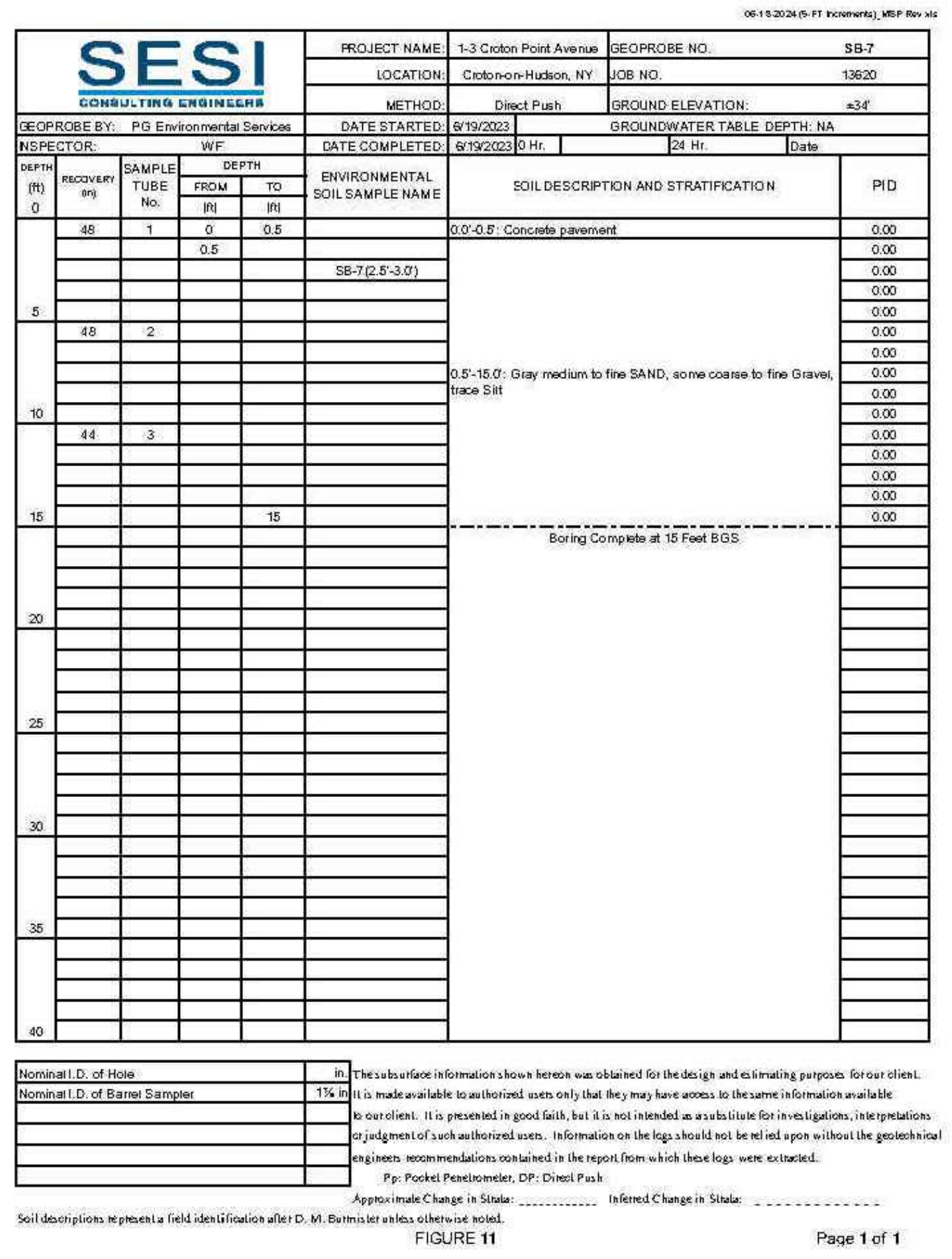
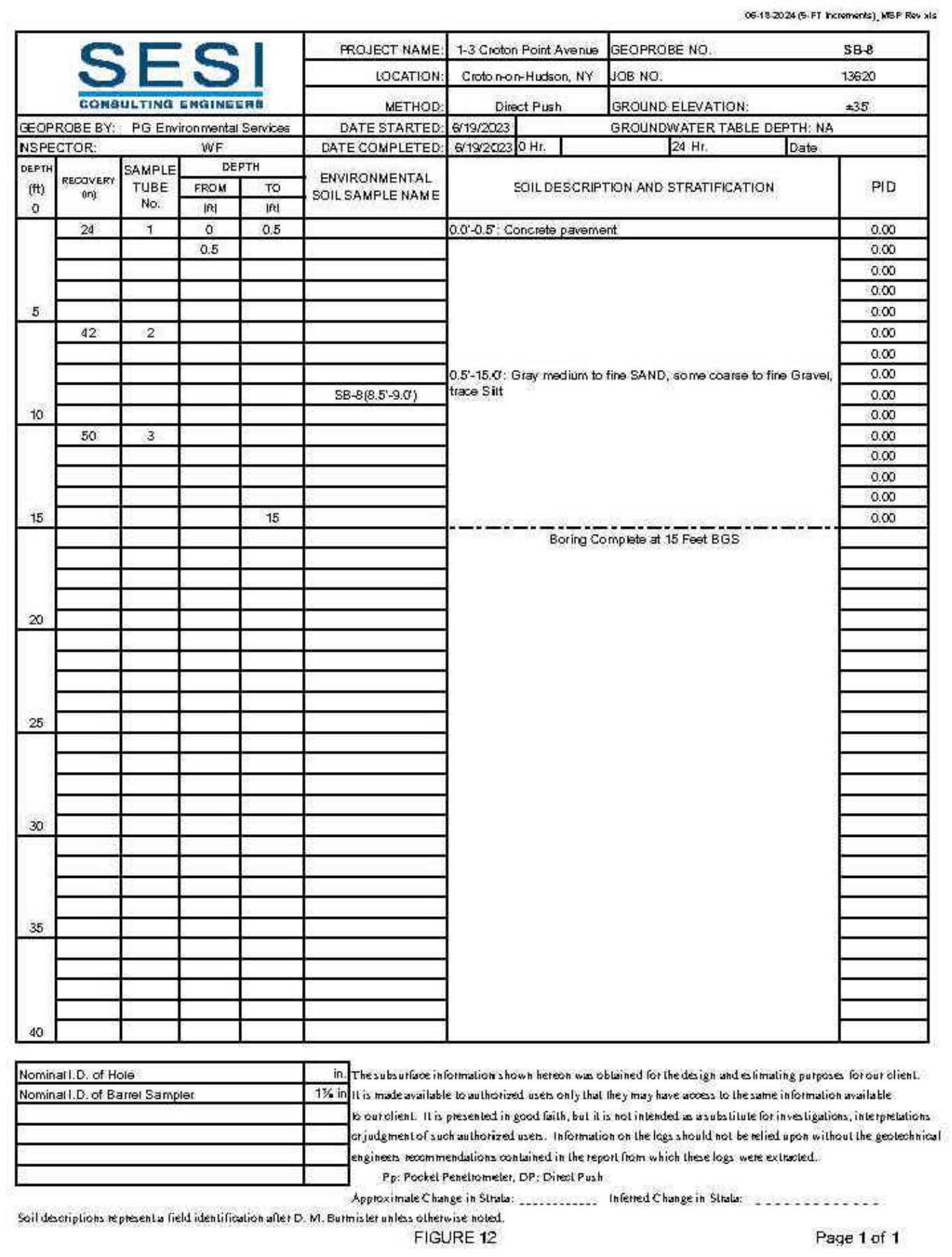
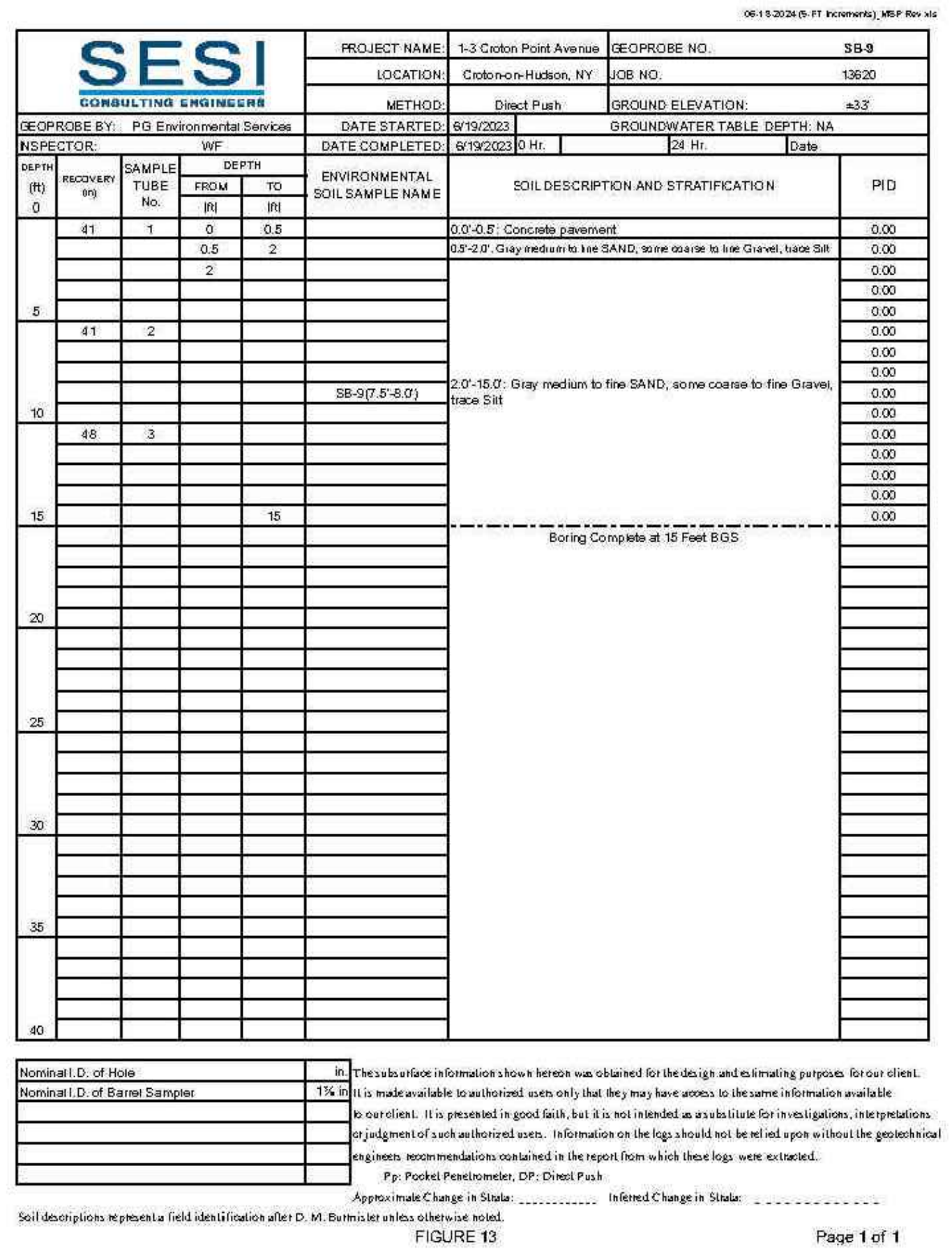
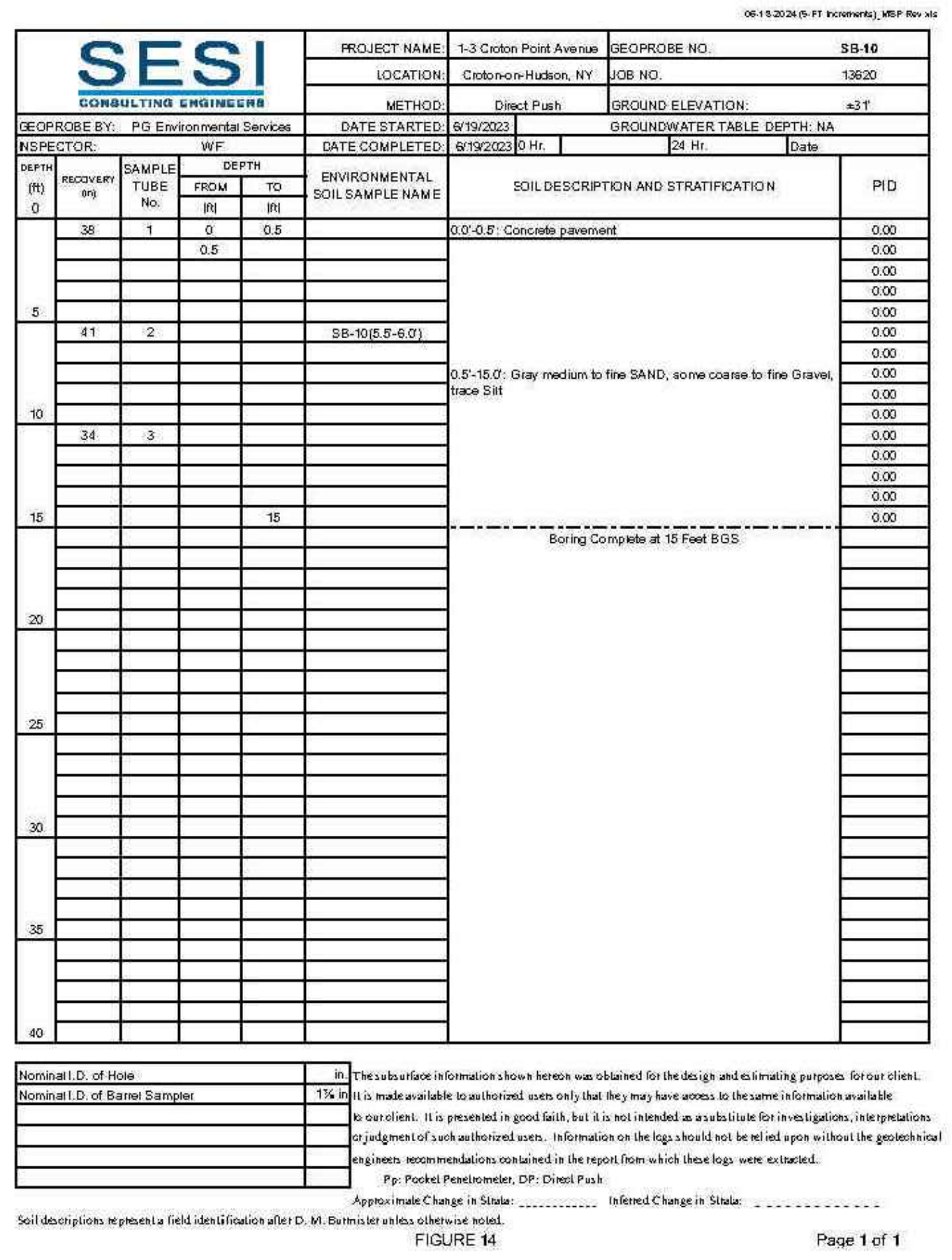
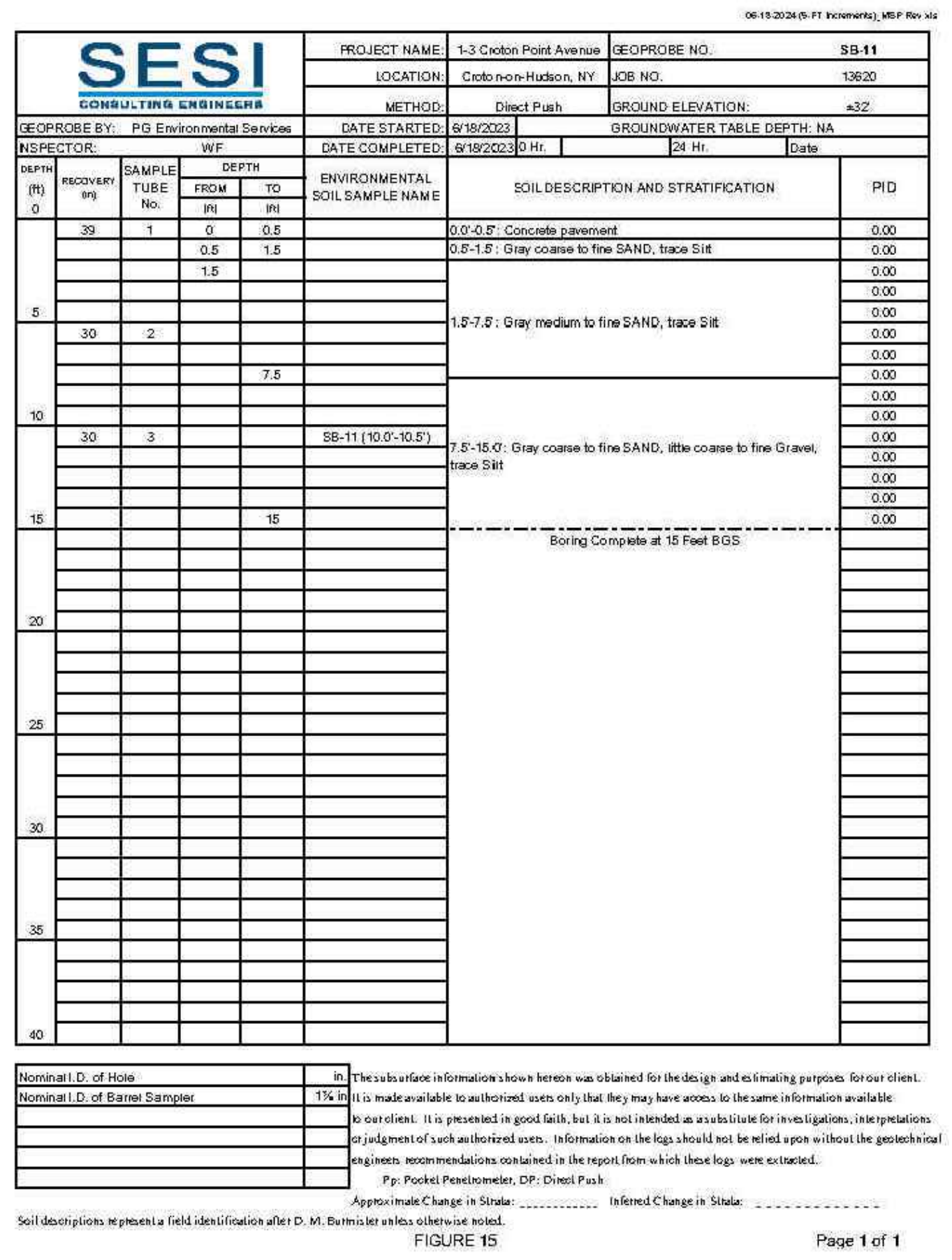
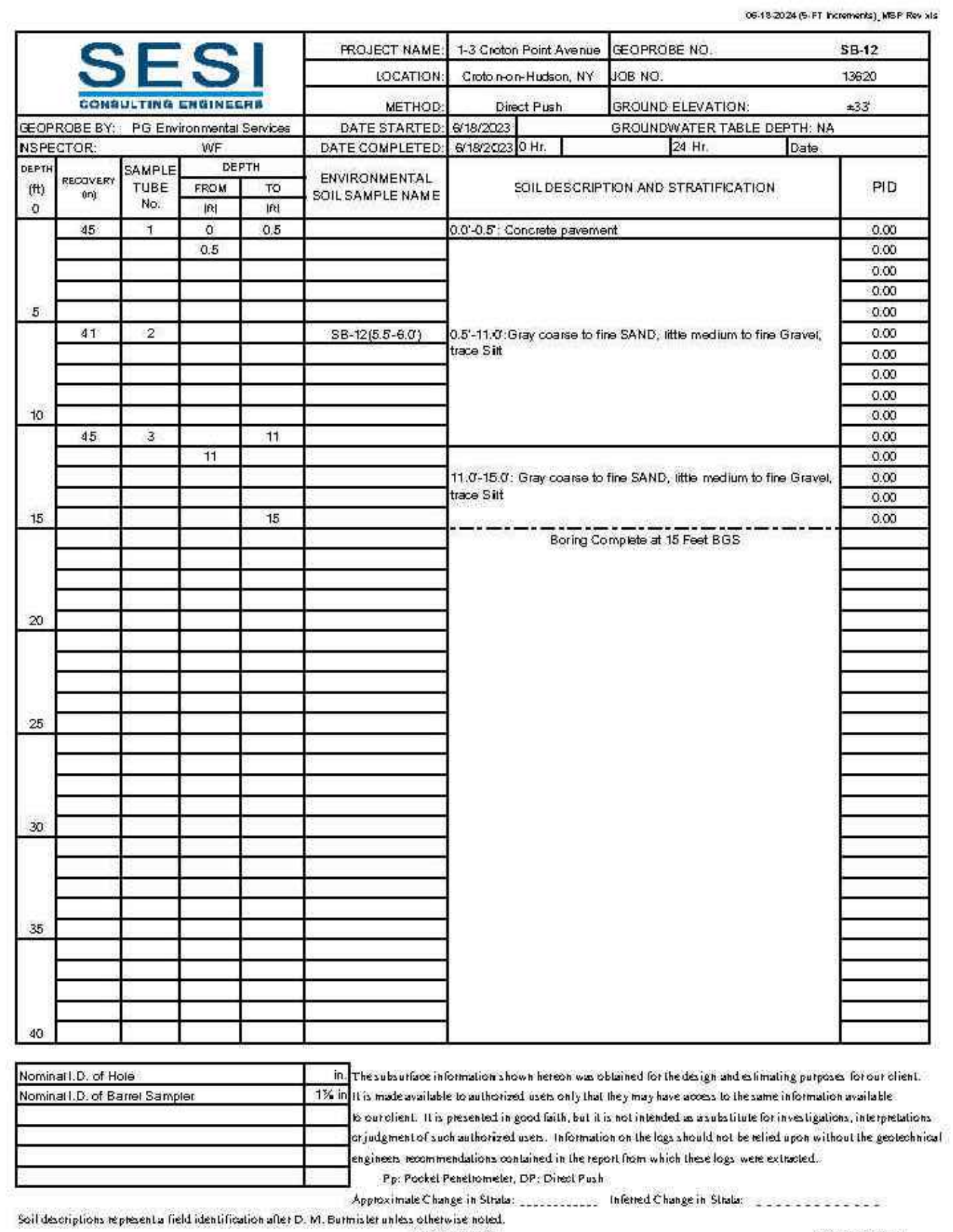

NO.	DATE	REVISION	BY
1	9-24-24	REVISED PER VILLAGE COMMENTS	NFB

INSITE
ENGINEERING, SURVEYING & LANDSCAPE ARCHITECTURE, P.C.

3 Garrett Place
Carmel, NY 10512
(845) 225-9690
(845) 225-9717 fax
www.insite-eng.com

PROJECT:

1 CROTON POINT

CROTON POINT AVE. & VETERANS PLAZA, VILLAGE OF CROTON-ON-HUDSON, WESTCHESTER CO., NY

DRAWING:

GEOTECHNICAL INSPECTION REPORTS

STATE OF NEW YORK RICHARD D. WILLIAMS JR. 085866 LICENSED PROFESSIONAL ENGINEER

PROJECT NUMBER	24154.100	PROJECT MANAGER	R.D.W.
DATE	8-1-24	DRAWN BY	T.S.M.
SCALE	NTS	CHECKED BY	D.L.M.

DRAWING NO. GIR-1

SHEET 10/10

ALTERATION OF THIS DOCUMENT, UNLESS UNDER THE DIRECTION OF A LICENSED PROFESSIONAL ENGINEER, IS A VIOLATION OF SECTION 7209 OF ARTICLE 145 OF THE EDUCATION LAW.

SEE DRAWING EX-1 FOR BORING LOCATIONS