2023-1 HILLSIDE CENTER - PHASE II
7180 NOLENSVILLE ROAD, NOLENSVILLE, TN 37135



VICINITY MAP
SCALE: 1"=1,000'



LOCATION MAP
NOT TO SCALE

CONTACT INFORMATION

SITE DEVELOPER
RICE CORPORATION
1511 SUNSET ROAD
BRENTWOOD, TN 37027
615-405-2424
MR MOHSEN MALAKOUTI

CIVIL ENGINEER
PRECISION ENGINEERING, LLC
1194 COLUMBIA AVE
TOMPKINSVILLE, KY 42167
270-407-5748
MR STEVE HARRIS, PE

ARCHITECT
MALAKOUTI ARCHITECTS
1511 SUNSET ROAD
BRENTWOOD, TN 37207
615-251-7060
MR MOHSEN MALAKOUTI

LANDSCAPE ARCHITECT
CUMBERLAND LANDESIGN
104 LEEWARD POINT
HENDERSONVILLE, TN 37075
615-333-4636
MR ROBERT WRAY

LAND SURVEYOR
PRECISION ENGINEERING, LLC
1194 COLUMBIA AVE
TOMPKINSVILLE, KY 42167
270-407-5748
MR STEVE HARRIS, PE

TRANSPORTATION CABINET
TN DEPARTMENT OF TRANSPORTATION - REGION 3
6601 CENTENNIAL BOULEVARD
NASHVILLE, TN 37243
615-350-4300

BUILDING INSPECTION DEPT
PUBLIC WORKS - TOWN OF NOLENSVILLE
7218 NOLENSVILLE ROAD
NOLENSVILLE, TN 37135
615-776-3633

PUBLIC WORKS
PUBLIC WORKS - TOWN OF NOLENSVILLE
7218 NOLENSVILLE ROAD
NOLENSVILLE, TN 37135
615-776-3633

HEALTH DEPARTMENT
WILLIAMSON COUNTY HEALTH DEPARTMENT
1324 W MAIN STREET
FRANKLIN, TN 37064
615-794-1542

ELECTRIC
NASHVILLE ELECTRIC SERVICE
1214 CHURCH STREET
NASHVILLE, TN 37246
615-736-6900

SANITARY SEWER DEPARTMENT
METRO WATER SERVICES
1700 3RD AVENUE NORTH
NASHVILLE, TN 37208
615-862-4600

WATER DEPARTMENT
NOLENSVILLE COLLEGE GROVE UTILITY DISTRICT
2002 JOHNSON INDUSTRIAL BOULEVARD
NOLENSVILLE, TN 37135
615-776-2511

M & S HOLDINGS, LLC
1511 SUNSET ROAD
BRENTWOOD, TN 37027
(615) 405-2424

THIS SITE PLAN HAS BEEN DESIGNED TO MEET THE TOWN OF NOLENSVILLE STANDARDS AND THE APPROVAL OF THE PLANNING COMMISSION. CHANGES SHALL NOT BE MADE TO THE APPROVED SITE PLAN UNLESS APPROVED BY EITHER THE TOWN ENGINEER OR TOWN PLANNER.

INDEX OF DRAWINGS

DRAWING NAME	SHEET NUMBER
OVERALL SITE LAYOUT	C-1.0
SITE CONCEPT PLAN	C-1.1
EROSION SEDIMENT CONTROL PLAN	C-2.0
EROSION SEDIMENT CONTROL DETAILS	C-2.1
SITE PLAN	C-3.0
GRADE PLAN	C-4.0
DETAILED GRADE PLAN	C-4.1
UTILITY PLAN	C-5.0
UTILITY DETAILS	C-5.1
DETAILS	C-6.0
DETAILS	C-7.0
DETAILS	C-8.0

MARCH 04, 2025

RMJE
CIVIL | GEOTECHNICAL | SURVEYING | MATERIAL TESTING

PO BOX 444
HINDMAN, KY 41822

3213 SUMMIT SQUARE PLACE
SUITE 100
LEXINGTON, KY 40509

PO BOX 2
TOMPKINSVILLE, KY 42167

PREVIOUSLY APPROVED

SITE STATISTICS

ARTICLE 1 - SITE DATA

PROJECT NAME: HILLSIDE CENTER - PHASE II
PROJECT #: 2023-1
SUBDIVISION:
LOT NUMBER:
ADDRESS: 7180 NOLENSVILLE ROAD
TOWN: NOLENSVILLE
COUNTY: WILLIAMSON
STATE: TENNESSEE
CIVIL DISTRICT: CS
EXISTING ZONING AND AREA DESIGNATION: CS
ACREAGE OF SITE: 2.86 AC
SQUARE FOOTAGE OF SITE: 124,751 SF
MINIMUM REQUIRED SETBACK LINES:
Yard fronting on any street: 15'
Side Yard: 15'
Rear Yard: 20'

OWNER: M&S HOLDINGS, LLC
Address: 1511 Sunset Road, Brentwood, TN 37027
Phone No: (615) 405-2424
Fax No:
E-mail address: mohsen@malakoutiarchitects.com
Contact Name: Mohsen Malakouti

APPLICANT: M&S HOLDINGS, LLC
Address: 1511 Sunset Road, Brentwood, TN 37027
Phone No: (615) 405-2424
Fax No:
E-mail address: mohsen@malakoutiarchitects.com
Contact Name: Mohsen Malakouti

BUILDING SQUARE FOOTAGE: 18,367 TOTAL SF
BUILDING HEIGHT: BLD 4 - 34'
BLD 5 - 35'
BLD 6 - 30'
MAXIMUM FLOOR AREA RATIO:
FLOOR AREA RATIO OF SITE: 6.79:1
MINIMUM PARKING REQUIREMENT: 94
MAXIMUM PARKING LIMIT:
PARKING PROVIDED: 110

2023-1 HILLSIDE CENTER - PHASE II
7180 NOLENSVILLE ROAD, NOLENSVILLE, TN 37135

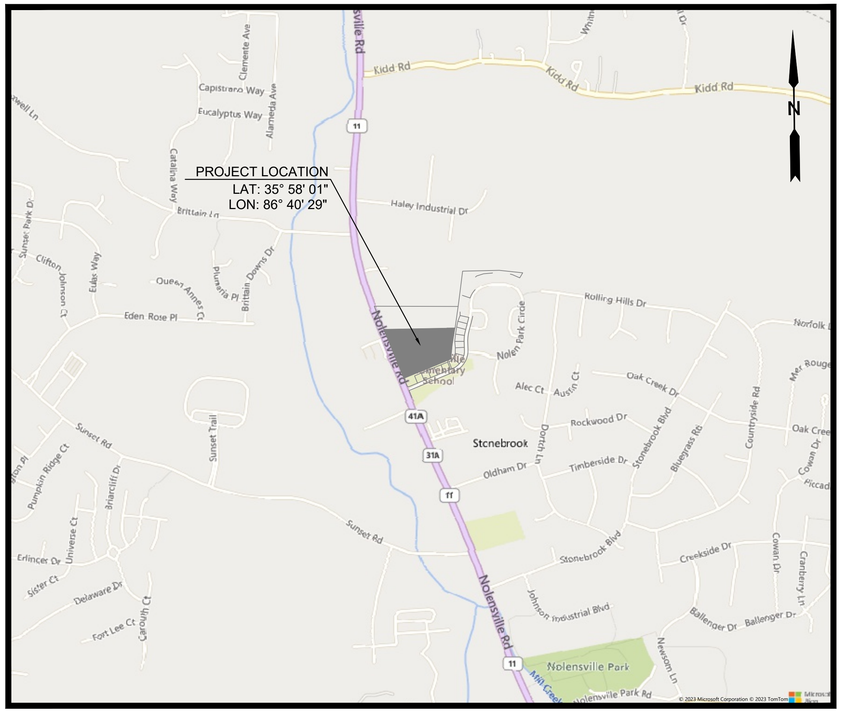

VICINITY MAP
SCALE: 1"=1,000'



LOCATION MAP
NOT TO SCALE

CONTACT INFORMATION

SITE DEVELOPER
RICE CORPORATION
1511 SUNSET ROAD
BRENTWOOD, TN 37027
615-405-2424
MR MOHSEN MALAKOUTI

CIVIL ENGINEER
PRECISION ENGINEERING, LLC
1194 COLUMBIA AVE
TOMPKINSVILLE, KY 42167
270-407-5748
MR STEVE HARRIS, PE

ARCHITECT
MALAKOUTI ARCHITECTS
1511 SUNSET ROAD
BRENTWOOD, TN 37207
615-251-7060
MR MOHSEN MALAKOUTI

LANDSCAPE ARCHITECT
CUMBERLAND LANDESIGN
104 LEEWARD POINT
HENDERSONVILLE, TN 37075
615-333-4636
MR ROBERT WRAY

LAND SURVEYOR
PRECISION ENGINEERING, LLC
1194 COLUMBIA AVE
TOMPKINSVILLE, KY 42167
270-407-5748
MR STEVE HARRIS, PE

TRANSPORTATION CABINET
TN DEPARTMENT OF TRANSPORTATION - REGION 3
6601 CENTENNIAL BOULEVARD
NASHVILLE, TN 37243
615-350-4300

BUILDING INSPECTION DEPT
PUBLIC WORKS - TOWN OF NOLENSVILLE
7218 NOLENSVILLE ROAD
NOLENSVILLE, TN 37135
615-776-3633

PUBLIC WORKS
PUBLIC WORKS - TOWN OF NOLENSVILLE
7218 NOLENSVILLE ROAD
NOLENSVILLE, TN 37135
615-776-3633

HEALTH DEPARTMENT
WILLIAMSON COUNTY HEALTH DEPARTMENT
1324 W MAIN STREET
FRANKLIN, TN 37064
615-794-1542

ELECTRIC
NASHVILLE ELECTRIC SERVICE
1214 CHURCH STREET
NASHVILLE, TN 37246
615-736-6900

SANITARY SEWER DEPARTMENT
METRO WATER SERVICES
1700 3RD AVENUE NORTH
NASHVILLE, TN 37208
615-862-4600

WATER DEPARTMENT
NOLENSVILLE COLLEGE GROVE UTILITY DISTRICT
2002 JOHNSON INDUSTRIAL BOULEVARD
NOLENSVILLE, TN 37135
615-776-2511

M & S HOLDINGS, LLC

1511 SUNSET ROAD
BRENTWOOD, TN 37027
(615) 405-2424

RMJE
CIVIL | GEOTECHNICAL | SURVEYING | MATERIAL TESTING

PO BOX 444
HINDMAN, KY 41822

3213 SUMMIT SQUARE PLACE
SUITE 100
LEXINGTON, KY 40509

PO BOX 2
TOMPKINSVILLE, KY 42167

THIS SITE PLAN HAS BEEN DESIGNED TO MEET THE TOWN OF NOLENSVILLE STANDARDS AND THE APPROVAL OF THE PLANNING COMMISSION. CHANGES SHALL NOT BE MADE TO THE APPROVED SITE PLAN UNLESS APPROVED BY EITHER THE TOWN ENGINEER OR TOWN PLANNER.

INDEX OF DRAWINGS

DRAWING NAME	SHEET NUMBER
OVERALL SITE LAYOUT	C-1.0
SITE CONCEPT PLAN	C-1.1
EROSION SEDIMENT CONTROL PLAN	C-2.0
EROSION SEDIMENT CONTROL DETAILS	C-2.1
SITE PLAN	C-3.0
GRADE PLAN	C-4.0
DETAILED GRADE PLAN	C-4.1
UTILITY PLAN	C-5.0
UTILITY DETAILS	C-5.1
DETAILS	C-6.0
DETAILS	C-7.0
DETAILS	C-8.0

SEPTEMBER 15, 2026

Hillside Center
7180 Nolensville Road Nolensville, TN 37135

Building #1 First Floor

Suite #	Tenant Name	Square Footage	Formula	Parking Spaces Required	Parking Spaces Provided
1A	Sweet Cece's	1,340	40 Occupants - 1 Space/3 Occupants	14	
1B	Rico's Bar and Grill	2,308	49 Occupants - 1 Space/3 Occupants	16	
1C	Wings to Go	2,707	89 Occupants - 1 Space/3 Occupants	30	
1D	First Impressions Pediatric Dentist	2,413	1 Space/300SF	8	
1E	NOLO Eye Care	2,274	1 Space/300SF	8	
1F	Noire the Nail Bar	2,139	1 Space/350SF	7	
1G	Happeinchance	2,493	54 Seats - 1 Space/3 Seats	18	
1H	Marco's Pizza	1,884	48 Occupants - 1 Space/3 Occupants	16	
			Lower Floor Parking Spaces	117	106

Lower Parking

Building #2

Suite #	Tenant Name	Square Footage	Formula	Parking Spaces Required	Parking Spaces Provided
A	House of Bread	1,740	1 Space/200SF	9	
B	Elite Endodontics	2,709	1 Space/300SF General Office/Retail (1,600SF) 1/200SF	9	
C	Sherwin Williams	3,264	Stock Room (1,465SF) 1/1000SF Office Space (124SF) 1/350SF	11	
			Lower Floor Parking Spaces	29	45

Total Lower Floor Parking Spaces **146** **151**

Building #3 Parking Deck Story

Suite #	Tenant Name	Square Footage	Formula	Parking Spaces Required	Parking Spaces Provided
Bldg 5	Retail	4,000	1 Space/200SF	25	
			Middle Floor Parking Spaces	25	50

Middle Parking

Building #1 Second Floor

Suite #	Tenant Name	Square Footage	Formula	Parking Spaces Required	Parking Spaces Provided
2A/B	LUX Salon Suites	6,791	1 Space/350SF	19	
2C	Tennessee Kid's Co	1,751	1 Space/350SF	5	
2D	Kemyaki	2,308	65 Occupants - 1 Space/3 Occupants	22	
2E	Cryo & Contour	2,104	1 Space/350SF	7	
2F/G	RMA Jiu Jitsu	3,315	57 Occupants - 1 Space/3 Occupants	19	
2H	Hillside Center Management Office	872	1 Space/350SF	2	
			Middle Floor Parking Spaces	74	74

Total Middle Floor Parking Spaces **99** **124**

Building #3

Suite #	Tenant Name	Square Footage	Formula	Parking Spaces Required	Parking Spaces Provided
Bldg 3	Kiddie Academy	10,000		30	
			Upper Floor Parking Spaces	30	33

Upper Parking

Building #3 - #5 Second Floor

Suite #	Tenant Name	Square Footage	Formula	Parking Spaces Required	Parking Spaces Provided
Bldg 5	Retail	6,700	1 Space/300SF	22	
Bldg 5	PROPOSED Office/Retail	10,000	1 Space/350SF	50	
			Upper Floor Parking Spaces	72	82

Total Upper Floor Parking Spaces **102** **115**

	Required	Provided
Lower Floor Parking Spaces	146	151
Middle Floor Parking Spaces	99	124
Upper Floor Parking Spaces	102	115

INDEX

PROPOSED REVISION

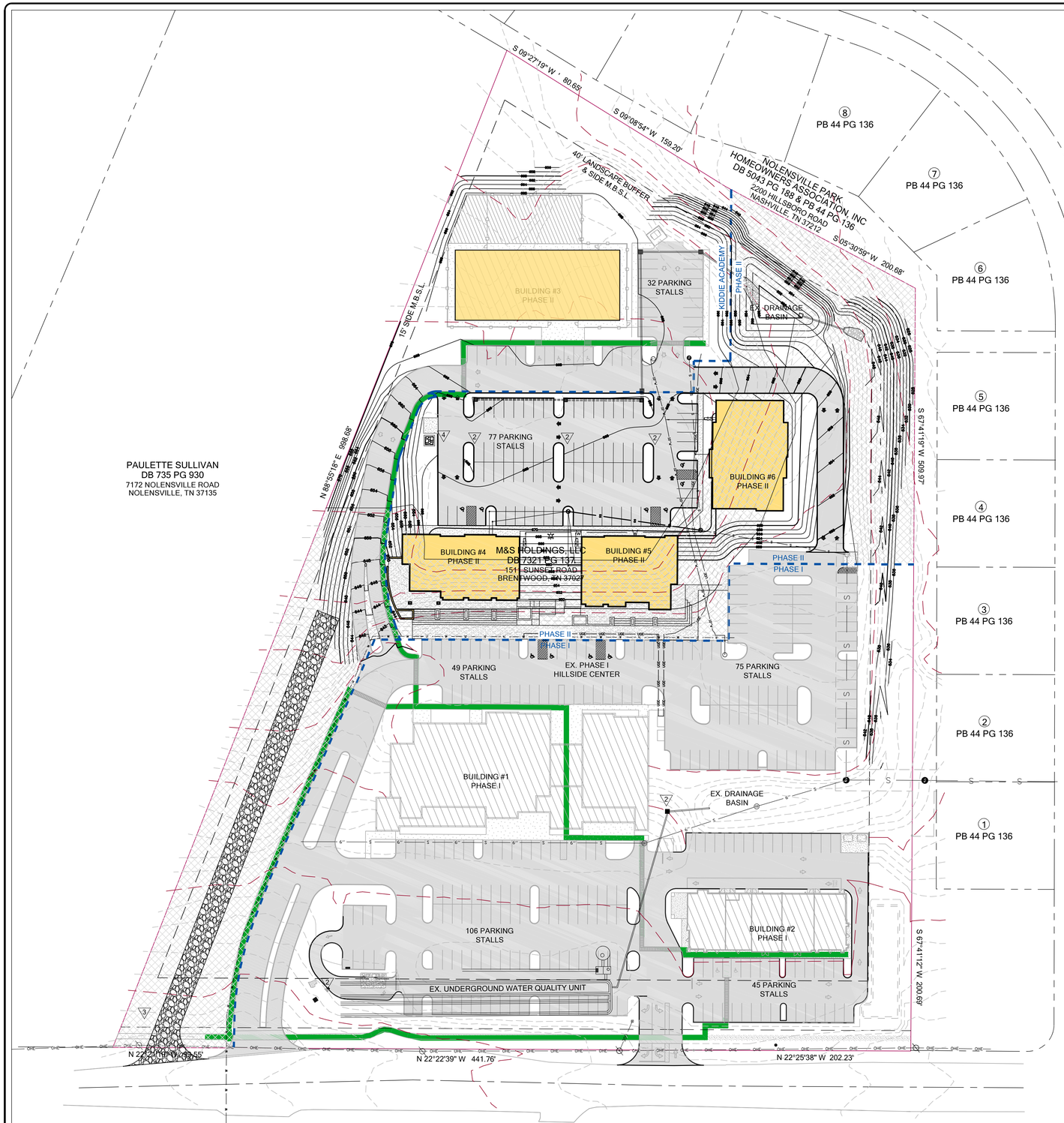

EXISTING SLOPE 14 - 19%

EXISTING SLOPE > 20%

PROPOSED SLOPE 14 - 19%

PROPOSED SLOPE > 20%

KEYNOTES

KEY	DESCRIPTION	DETAIL
1	SILT FENCE	1 / C2.1
2	INLET PROTECTION	2 / C2.1
3	CONSTRUCTION ENTRANCE	3 / C2.1
4	CONCRETE WASHOUT FACILITY	4 / C2.1

PARKING STATISTICS

Lower Parking

Building #1 First Floor

Suite #	Tenant Name	Square Footage	Formula	Parking Spaces Required	Parking Spaces Provided
1A	Sweet Cece's	1,340	40 Occupants - 1 Space/3 Occupants	14	
1B	Rock's Bar and Grill	2,308	49 Occupants - 1 Space/3 Occupants	16	
1C	Wings to Go	2,707	89 Occupants - 1 Space/3 Occupants	30	
1D	First Impressions Pediatric Dentist	2,413	1 Space/300SF	8	
1E	NOLO Eye Care	2,274	1 Space/300SF	8	
1F	Noire the Nail Bar	2,139	1 Space/350SF	7	
1G	Happenchance	2,493	54 Seats - 1 Space/3 Seats	18	
1H	Marco's Pizza	1,884	46 Occupants - 1 Space/3 Occupants	15	
			Lower Floor Parking Spaces	117	106

Building #2

Suite #	Tenant Name	Square Footage	Formula	Parking Spaces Required	Parking Spaces Provided
A	House of Bread	1,740	1 Space/200SF	9	
B	Elite Endodontics	2,709	1 Space/300SF	9	
C	Sherwin Williams	3,264	General Office/Retail (1,600SF) 1/200SF Stock Room (1,465SF) 1/1000SF Office Space (124SF) 1/350SF	11	
			Lower Floor Parking Spaces	29	45
			Total Lower Floor Parking Spaces	146	151

Middle Parking

Building #4 and #5 First Floor

Suite #	Tenant Name	Square Footage	Formula	Parking Spaces Required	Parking Spaces Provided
Bldg 4	Retail	5,000	1 Space/200SF	25	
Bldg 5	Retail	5,000	1 Space/200SF	25	
			Middle Floor Parking Spaces	50	50

Building #1 Second Floor

Suite #	Tenant Name	Square Footage	Formula	Parking Spaces Required	Parking Spaces Provided
2A/B	LUX Salon Suites	6,791	1 Space/350SF	19	
2C	Tennessee Kid's Co	1,751	1 Space/350SF	5	
2D	Kenyaki	2,308	65 Occupants - 1 Space/3 Occupants	22	
2E	Cryo & Contour	2,104	1 Space/350SF	7	
2F/G	RMA Jiu Jitsu	3,315	57 Occupants - 1 Space/3 Occupants	19	
2H	Hillside Center Management Office	872	1 Space/350SF	2	
			Middle Floor Parking Spaces	74	74
			Total Middle Floor Parking Spaces	124	124

Upper Parking

Building #3

Suite #	Tenant Name	Square Footage	Formula	Parking Spaces Required	Parking Spaces Provided
Bldg 3	Kiddie Academy	10,000		30	
			Upper Floor Parking Spaces	30	33

Building #4, #5, and #6 Second Floor

Suite #	Tenant Name	Square Footage	Formula	Parking Spaces Required	Parking Spaces Provided
Bldg 4	Office/Retail	5,000	1 Space/250SF	20	
Bldg 5	Office/Retail	5,000	1 Space/250SF	20	
Bldg 6	Regus	6,700	1 Space/300SF	22	
			Upper Floor Parking Spaces	62	77
			Total Upper Floor Parking Spaces	92	110

	Required	Provided
Lower Floor Parking Spaces	146	151
Middle Floor Parking Spaces	124	124
Upper Floor Parking Spaces	92	110

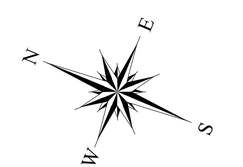

0' 50' 100' 150'

PREVIOUSLY APPROVED

OVERALL SITE PLAN

RMJE
CIVIL | GEOTECHNICAL | SURVEYING | MATERIAL TESTING
3213 SUMMIT SQUARE PLACE
SUITE 100
LEXINGTON, KY 40509
PO BOX 444
HINDMAN, KY 41822
PO BOX 2
TOMPKINSVILLE, KY 42167

2023-1 HILLSIDE CENTER
7180 NOLENSVILLE ROAD, NOLENSVILLE, TN 37135

OVERALL SITE PLAN

STEPHEN R. HARRIS
REGISTERED ENGINEER
STATE OF TENNESSEE

REVISIONS

SCALE:	AS SHOWN
JOB No.:	23-01-054
DESIGNED BY:	JDS
DETAILED BY:	SRH
CHECKED BY:	
DATE:	03-04-2025

PE | RMJE
COPYRIGHT © 2025

C1.0

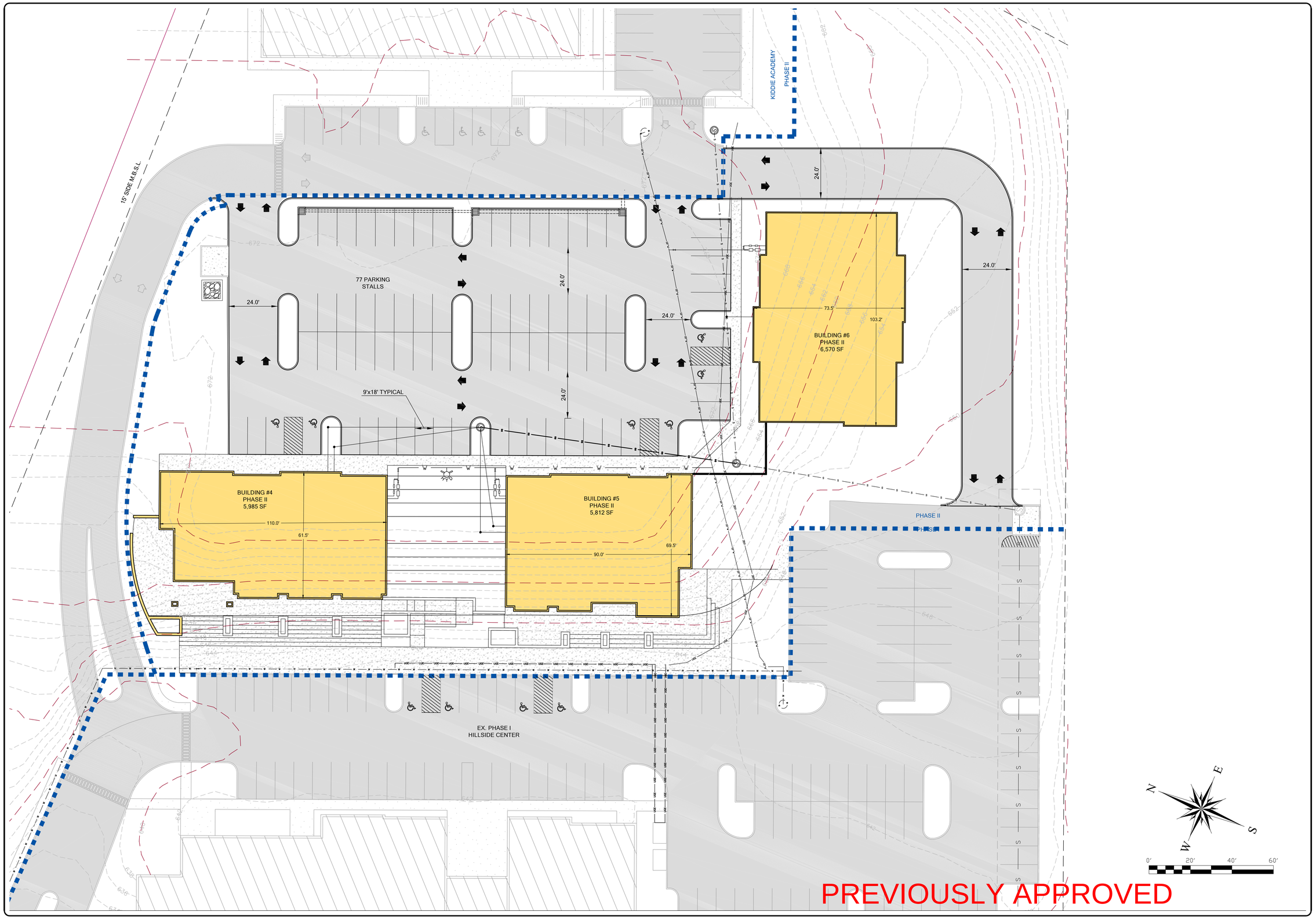

PREVIOUSLY APPROVED

SITE CONCEPT PLAN

RMJE

CIVIL | GEOTECHNICAL | SURVEYING | MATERIAL TESTING

PO BOX 444
HINDMAN, KY 41822

3213 SUMMIT SQUARE PLACE
SUITE 100
LEXINGTON, KY 40509

PO BOX 2
TOMPKINSVILLE, KY 42167

2023-1 HILLSIDE CENTER

7180 NOLENSVILLE ROAD, NOLENSVILLE, TN 37135

SITE CONCEPT PLAN

STEPHEN R. HARRIS
REGISTERED ENGINEER
STATE OF TENNESSEE

REVISIONS

SCALE: AS SHOWN
JOB No.: 23-01-054
DESIGNED BY:
DETAILED BY: JBS
CHECKED BY: RMJ
DATE: 03-04-2025

PE | RMJE
COPYRIGHT © 2025

C1.1

CONSTRUCTION SEQUENCE

1. CONTRACTOR SHALL ACQUIRE NOI PERMIT AND/OR A LOCAL GRADING PERMIT (IF APPLICABLE) PRIOR TO DISTURBANCE OF SITE
2. STAKE AND/OR FLAG LIMITS IF CLEARING.
2. DURING PRECONSTRUCTION MEETING ALL EROSION & SEDIMENT CONTROL FACILITIES & PROCEDURES SHALL BE DISCUSSED.
3. CLEARING & GRUBBING, AS NECESSARY, FOR INSTALLATION OF PERIMETER CONTROLS.
4. INSTALL SILT FENCE PERIMETER CONTROLS AS SHOWN ON PLANS.
5. INSTALL CONSTRUCTION ENTRANCE AND CONCRETE WASHOUT FACILITY, IF CONDITIONS ARE SUCH THAT MUD IS COLLECTING ON VEHICLE TIRES, THE TIRES MUST BE CLEANED BEFORE THE VEHICLES ENTER THE PUBLIC ROADWAY. THE SITE ENTRANCE SHALL BE MAINTAINED IN A CONDITION THAT WILL PREVENT THE TRACKING OR FLOW OF MUD ONTO THE PUBLIC RIGHT-OF-WAY. ALL MATERIALS SPILLED, DROPPED, WASHED, OR TRACKED FROM VEHICLES ONTO THE ROADWAY MUST BE REMOVED PROMPTLY.
6. CLEARING & GRUBBING THE REMAINING SITE WITHIN THE PERMITTED LIMITS OF DISTURBANCE AS NECESSARY.
7. BEGIN FILLING & GRADING AS REQUIRED TO REACH SUBGRADE.
8. CONSTRUCT AND MAINTAIN TEMPORARY DRAINAGE SWALE DURING FILLING & GRADING ACTIVITIES.
9. CONSTRUCT SITE WORK INCLUDING STORM DRAINAGE FACILITIES.
10. UPON INSTALLATION OF STORM DRAINAGE CATCH BASINS IF APPLICABLE, INSTALL INLET PROTECTION.
11. MAINTAIN EROSION & SEDIMENTATION CONTROL MEASURES UNTIL THE SITE HAS BEEN COMPLETELY STABILIZED.
12. REMOVE SEDIMENT CONTROLS.

KEYNOTES

KEY	DESCRIPTION	DETAIL
1	SILT FENCE	1 / C2.1
2	INLET PROTECTION	2 / C2.1
3	CONSTRUCTION ENTRANCE	3 / C2.1
4	CONCRETE WASHOUT FACILITY	4 / C2.1

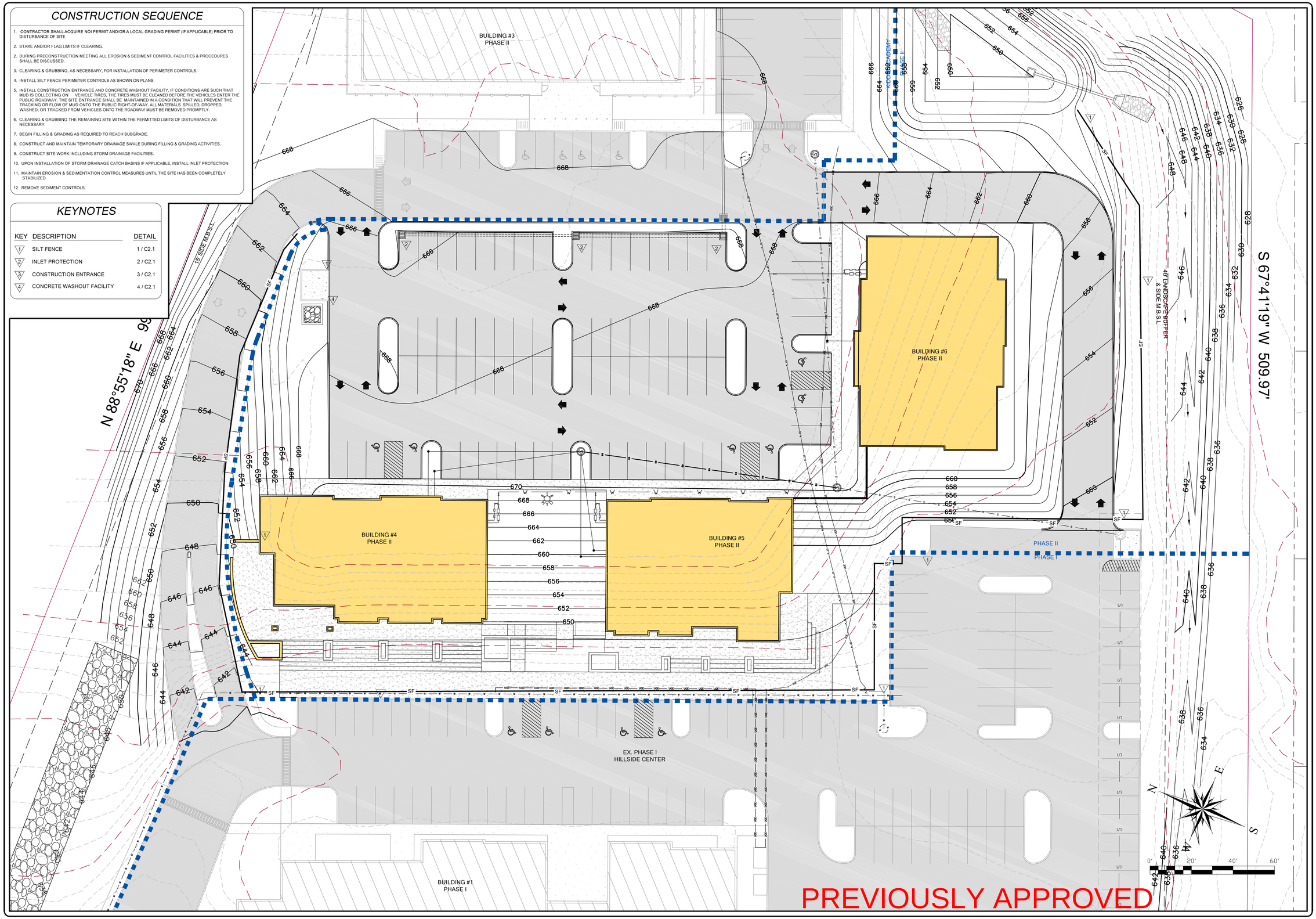

ESC PLAN

RMJE
CIVIL | GEOTECHNICAL | SURVEYING | MATERIAL TESTING
3213 SUMMIT SQUARE PLACE
SUITE 100
LEXINGTON, KY 40509
PO BOX 2
TOMPKINSVILLE, KY 42167
PO BOX 444
HINDMAN, KY 41822

2023-1 HILLSIDE CENTER
7180 NOLENSVILLE ROAD, NOLENSVILLE, TN 37135

EROSION SEDIMENT CONTROL PLAN

STEPHEN R. HARRIS
REGISTERED ENGINEER
STATE OF TENNESSEE

REVISIONS

SCALE: AS SHOWN
JOB No.: 23-01-054
DESIGNED BY:
DETAILED BY: JBS
CHECKED BY: RMJ
DATE: 03-04-2025

PE | RMJE
COPYRIGHT © 2025

C2.0

EROSION AND SEDIMENT CONTROL NOTES

1. CONTRACTOR SHALL ACQUIRE NOI PERMIT PRIOR TO DISTURBANCE OF SITE

2. ALL WORK SPECIFIED AS AN ODOT ITEM SHALL BE GOVERNED BY THE CURRENT STATE OF TENNESSEE DEPARTMENT OF TRANSPORTATION CONSTRUCTION AND MATERIAL SPECIFICATION HANDBOOK.

3. THIS CONTRACT DRAWING SHALL BE MADE AVAILABLE ON SITE AT ALL TIMES AND PRESENTEED UPON REQUEST IF FORESEEN STORM WATER POLLUTION PREVENTION IS ENCOUNTERED, ADDITIONAL STORM WATER POLLUTION PREVENTION (SWPP) MEASURES MAY BE REQUESTED BY THE OWNER, COUNTY ENGINEER, PROJECT ENGINEER OR SOIL CONSERVATION SERVICE REPRESENTATIVE AT ANYTIME. SUCH REQUESTS SHALL BE IMPLEMENTED IMMEDIATELY AT CONTRACTOR'S EXPENSE.

4. ALL STORM WATER POLLUTION PREVENTION ITEMS SHALL BE INSTALLED AS SHOWN OR NOTED ON THIS SHEET.

5. PLANT TEMPORARY SEEDING AND MULCHING IN ALL AREAS THAT SHALL BE INACTIVE FOR 14 DAYS OR MORE. ALL DISTURBED AND ERODED EARTH SHALL BE REGRADED AND SEEDED WITHIN 7 DAYS WITH SEEDING, AS DEFINED ABOVE AND SHOWN ON THE TABLE BELOW. TO ESTABLISH STABILITY AND PROVIDE SEDIMENT CONTROL, WHERE POSSIBLE, TEMPORARY SEEDING GROWTH SHALL NOT BE MOWED UNTIL IT HAS GONE TO SEED FOR 1 YEAR.

TEMPORARY SEEDING SPECIFICATIONS:

SEEDING DATES	SEED TYPE	APPLICATION RATE PER 1,000 S.F.
MARCH 1 - AUGUST 15	OATS PERENNIAL RYE GRASS OR TALL FESCUE	3# 1#
AUGUST 16 - NOVEMBER 1	RYE, WHEAT OR PERENNIAL RYE GRASS TALL FESCUE	3# 1#
AFTER NOVEMBER 1	STRAW OR HAY MULCH	2-3 BALES
SEED BED PREPARATION	LIME 10-10-10 OR 12-12-12 FERTILIZER	100# 12-15#

6. PERMANENT VEGETATION SHALL BE INSTALLED WITHIN 7 DAYS AT THE COMPLETION OF ANY GRADED AREAS, WEATHER PERMITTING.

7. AT SUCH TIME ROUGH GRADING OF THE SITE IS COMPLETE AND DRAINAGE DIVERTS TO INLETS, INLET SEDIMENT FILTERS SHALL BE INSTALLED AT ALL INLET STRUCTURES TO KEEP PIPING SYSTEMS FREE OF SILTATION.

8. SILT BARRIERS SHALL BE INSTALLED AROUND ALL EXISTING OR NEW STORM INLETS, CATCH BASINS, YARD DRAINS. INSTALL ROCK CHECK DAMS FOR HEADWALL INLETS FOR STORM WATER POLLUTION PREVENTION.

9. STORM WATER POLLUTION PREVENTION MEASURES SHALL BE INSTALLED AROUND ALL DIRT OR TOPSOIL STOCKPILES AND OTHER TEMPOARILY DISTURBED AREAS AS SHOWN ON THESE PLANS AND AS DIRECTED BY THE ENGINEER.

10. CONTRACTOR SHALL INSPECT ALL SWPP MEASURES DAILY AND REPAIR AS NECESSARY TO PREVENT EROSION. SILTATION SHALL BE REMOVED FROM AREAS WHERE FAILURES HAVE OCCURED AND CORRECTIVE ACTION TAKEN WITH 24 HOURS TO MAINTAIN ALL SWPP.

11. SILT BARRIERS, CONSTRUCTION ENTRANCES, AND SILT FENCES SHALL REMAIN IN PLACE UNTIL A GOOD STAND OR GRASS HAS BEEN OBTAINED AND/OR PAVING OPERATIONS ARE COMPLETE. CONTRACTOR SHALL KEEP SILT FROM ENTERING ANY STORM DRAINAGE SYSTEM. ONCE SITE HAS BEEN COMPLETELY STABILIZED, ANY SILT IN PIPES AND DRAINAGE SWALES SHALL BE REMOVED WITHIN 10 DAYS.

12. TEMPORARY SEDIMENTATION AND STORM WATER POLLUTION PREVENTION MEASURES MUST BE INSPECTED AND LOGGED BY THE CONTRACTOR FOR INSPECTION, LOGGING SHALL BE WEEKLY AND AFTER RAIN STORMS. LOG TO BE KEPT ON SITE FOR OWNER REVIEW.

13. UTILITY COMPANIES MUST COMPLY WITH ALL STORM WATER POLLUTION PREVENTION MEASURES AS DEFINED ON THE STORM WATER POLLUTION PREVENTION PLANS, DETAILS AND NOTES.

14. THE TOTAL AREA OF DISTURBANCE FOR THIS PROJECT IS ±2.61 ACRES.

15. ALL EXISTING WATER COURSES WITHIN THE PROJECT LIMITS SHALL BE TEMPORARILY PROTECTED DURING THE LAND CLEARING AND GRADING OPERATIONS. SOILS WITHIN 50 FEET OF SAID WATER COURSES SHALL BE STABILIZED WITHIN 2 DAYS OF THE INITIAL CLEARING/GRADING OPERATION AS SHOWN ON PLANS.

16. IT IS THE CONTRACTOR'S RESPONSIBILITY TO MAINTAIN ALL SEDIMENTATION AND STORM WATER POLLUTION PREVENTION ITEMS AT ALL TIMES.

17. ALL STORM WATER POLLUTION PREVENTION AND SEDIMENT CONTROL MEASURES WILL BE INSTALLED BEFORE ANY OTHER EARTH MOVING OCCURS.

18. THE FOLLOWING STORM WATER POLLUTION PREVENTION AND SEDIMENT CONTROL MEASURES WILL BE USED ON THIS SITE:
- 17.A. SILT FENCE
- 17.B. SILT BARRIERS
- 17.C. CONSTRUCTION ENTRANCE
- 17.D. CONCRETE WASHOUT FACILITY

19. DUST CONTROL SHALL BE MAINTAINED THROUGHOUT CONSTRUCTION. IF POSSIBLE GRADING SHALL BE DONE BY PHASING. IF PHASING IS NOT AN OPTION, DUST SHALL BE CONTROLLED WITH WATER DURING EARTHWORK. AFTER EARTHWORK OPERATIONS, THE EXPOSED SOILS SHALL BE COVERED WITH STRAW OR MULCH UNTIL SEEDED.

20. DUST SHALL BE CONTAINED USING WATER, OIL IS NOT TO BE USED AS A DUST SUPPRESSANT.

21. ANY DISCHARGE OF PETROLEUM OR PETROLEUM PRODUCTS OF LESS THAN 25 GALLONS ONTO A PERVIOUS SURFACE SHALL BE LEGALLY REMOVED AND PROPERLY TREATED OR PROPERLY DISPOSED OF, OR OTHERWISE REMEDIATED, SO THAT NO CONTAMINATION FROM THE DISCHARGE REMAINS ON-SITE.

22. IN THE EVENT OF A LARGE PETROLEUM WASTED SPILL (25 OR MORE GALLONS) CONTRACTOR MUST CONTACT THE KENTUCKY EPA, THE LOCAL FIRE DEPARTMENT, AND THE LOCAL EMERGENCY PLANNING COMMITTEE WITHIN 30 MINUTES OF A SPILL OF 25 OR MORE GALLONS.

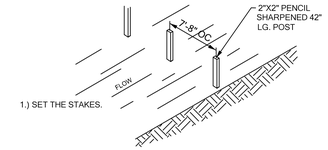

NOTES

1. SILT FENCE. THIS SEDIMENT BARRIER UTILIZES STANDARD STRENGTH OR EXTRA STRENGTH SYNTHETIC FILTER FABRICS. IT IS DESIGNED FOR SITUATIONS IN WHICH ONLY SHEET OR OVERLAND FLOWS ARE EXPECTED.
2. THE HEIGHT OF A SILT FENCE SHALL NOT EXCEED 36 INCHES (HIGHER FENCES MAY IMPOUND VOLUMES OF WATER SUFFICIENT TO CAUSE FAILURE TO THE STRUCTURE.
3. THE FILTER FABRIC SHALL BE PURCHASED IN A CONTINUOUS ROLL TO THE LENGTH OF THE BARRIER TO AVOID THE USE OF JOINTS. WHEN JOINTS ARE NECESSARY FILTER CLOTH SHALL BE SPLICED TOGETHER ONLY AT A SUPPORT POST WITH A MINIMUM 6-INCH OVERLAPS AND SECURELY SEALED.
4. WHEN STANDARD STRENGTH FILTER FABRIC IS USED A WIRE MESH SUPPORT FENCE SHALL BE FASTENED SECURELY TO THE UPSLOPE SIDE OF THE POSTS USING HEAVY DUTY WIRE STAPLES AT LEAST 1 INCH LONG, TIE WIRES OR HOG RINGS. THE WIRE SHALL EXTEND INTO THE TRENCH A MINIMUM OF 2 INCHES AND SHALL NOT EXTEND MORE THAN 36 INCHES ABOVE THE ORIGINAL GROUND SURFACE.
5. POSTS SHALL BE SPACED A MAXIMUM OF 10 FEET APART AT THE BARRIER LOCATION AND DRIVEN SECURELY INTO THE GROUND (MINIMUM OF 12 INCHES). WHEN EXTRA STRENGTH FABRIC IS USED WITHOUT THE WIRE SUPPORT, FENCE POST SPACING SHALL NOT EXCEED 6 FEET.
6. A TRENCH SHALL BE EXCAVATED APPROXIMATELY 4 INCHES WIDE AND 4 INCHES DEEP ALONG THE LINE OF POSTS AND UPSLOPE FROM THE BARRIER.
7. THE STANDARD STRENGTH FILTER FABRIC SHALL BE STAPLED OR WIRED TO THE FENCE AND 8 INCHES OF THE FABRIC SHALL BE EXTENDED INTO THE TRENCH. THE FABRIC SHALL NOT EXTEND MORE THAN 36 INCHES ABOVE THE ORIGINAL GROUND SURFACE. FILTER FABRIC SHALL NOT BE STAPLED TO EXISTING TREES.

SILT FENCE DETAIL 1
N.T.S.

1. WHEN EXTRA STRENGTH FILTER FABRIC AND CLOSER POST SPACING ARE USED THE WIRE MESH SUPPORT FENCE MAY BE ELIMINATED IN SUCH A CASE THE FILTER FABRIC IS STAPLED OR WIRED DIRECTLY TO THE POSTS.
2. THE TRENCH SHALL BE BACKFILLED AND SOIL COMPACTED OVER THE FILTER FABRIC.
3. SILT FENCES SHALL BE REMOVED WHEN THEY HAVE SERVED THEIR USEFUL PURPOSE BUT NOT BEFORE THE UPSLOPE AREA HAS BEEN PERMANENTLY STABILIZED.

MAINTENANCE

1. SILT FENCES AND FILTER BARRIERS SHALL BE INSPECTED IMMEDIATELY AFTER EACH RAINFALL AND AT LEAST DAILY DURING PROLONGED RAINFALL. ANY REQUIRED REPAIRS SHALL BE MADE IMMEDIATELY.
2. SHOULD THE FABRIC ON A SILT FENCE OF FILTER BARRIER DECOMPOSE OR BECOME INEFFECTIVE PRIOR TO THE END OF THE EXPECTED USABLE LIFE AND THE BARRIER IS STILL NECESSARY, THE FABRIC SHALL BE REPLACED PROMPTLY.
3. SEDIMENT DEPOSITS SHALL BE REMOVED AFTER EACH STORM EVENT. THEY MUST BE REMOVED WHEN DEPOSITS REACH APPROXIMATELY ONE-HALF THE HEIGHT OF THE BARRIER.
4. ANY SEDIMENT DEPOSITS REMAINING IN PLACE AFTER THE SILT FENCE OR FILTER BARRIER IS NO LONGER REQUIRED SHALL BE DRESSED TO CONFORM WITH THE EXISTING GRADE PREPARED AND SEEDED.

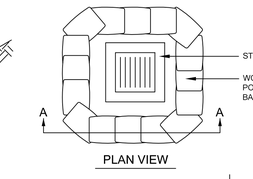

NOTES:

1. SURROUND INLET WITH TOW COURSES OF BAGS (MINIMUM).
2. FILL BAGS HALF FULL WITH #57 STONE.

INLET PROTECTION 2

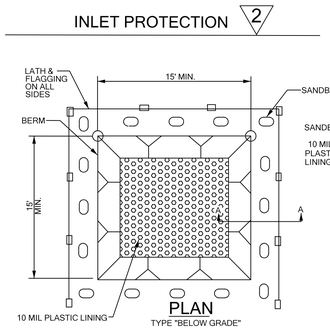

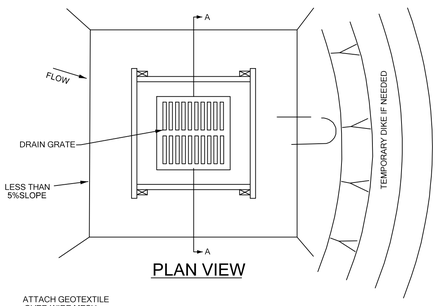

NOTES

1. DROP INLET SEDIMENT BARRIERS ARE TO BE USED FOR SMALL, NEARLY LEVEL DRAINAGE AREAS. (LESS THAN 5%)
2. USE 2x4 WOOD OR EQUIVALENT METAL STAKES. (3FT. MIN. LENGTH).
3. INSTALL 2x4 WOOD TOP FRAME TO INSURE STABILITY.
4. THE TOP OF THE FRAME (PONDING HEIGHT) MUST BE WELL BELOW THE GROUND ELEVATION DOWNSLOPE TO PREVENT RUNOFF FROM BY-PASSING THE INLET. A TEMPORARY DIKE MAY BE NECESSARY ON THE DOWNSLOPE SIDE OF THE STRUCTURE.
5. WIRE MESH SHALL BE OF SUFFICENT STRENGTH TO SUPPORT FABRIC WITH WATER FULLY IMPOUNDED AGAINST IT. IT SHALL BE STRETCHED TIGHTLY AROUND THE FRAME AND FASTENED SECURELY TO THE FRAME.
6. GEOTEXTILE SHALL HAVE AN EQUIVALENT OPENING SIZE OF 20-40 SIEVE AND BE RESISTANT TO SUNLIGHT. IT SHALL BE STRETCHED TIGHTLY AROUND THE FRAME AND FASTENED SECURELY. IT SHALL EXTEND FROM THE TOP OF THE FRAME TO 18 IN. BELOW THE INLET NOTCH ELEVATION. THE GEOTEXTILE SHALL OVERLAP ACROSS ONE SIDE OF THE INLET SO THE ENDS OF THE CLOTH ARE NOT FASTENED TO THE SAME POST.

(OR APPROVED EQUAL)

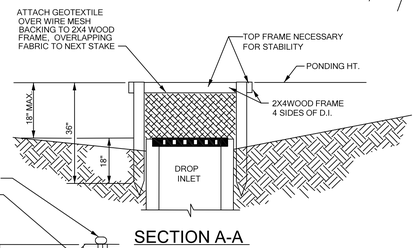

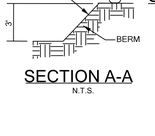

FABRIC PROPERTIES

MIN. TENSILE STRENGTH	120 LBS.
MAX. ELONGATION @60 LBS.	50%
MIN. PUNCTURE STRENGTH	50 LBS.
MIN. TEAR STRENGTH	40 LBS.
MIN. BURST STRENGTH	200 PSI
APPARENT OPENING SIZE	<=0.84 mm
MIN. PERMITTIVITY SEC^(-1)	1x10^(-2)
ULTRAVIOLET EXPOSURE STRENGTH RETENTION	70%

SILT BARRIER 2
N.T.S

CONCRETE WASHOUT FACILITY 4
N.T.S.

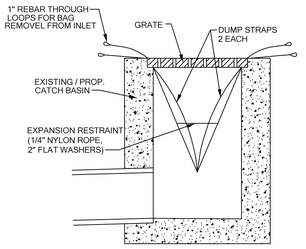

SILTSACK DETAIL 5
N.T.S.

SILTSACK SPECIFICATION
Control of Sediment Entering Catch Basins
(Stormwater Management)

1.0 Description

1.1 This work shall consist of furnishing, installing, maintaining, and removing SILTSACK Sediment Control Device as directed by the engineer or as shown on the contract drawings. The SILTSACK Sediment Control Device is manufactured by:

ACF Environmental, Inc.
1801 A-Willis Road
Richmond, Virginia 23237
Phone: 800-644-9223
Fax: 804-743-7779

2.0 Materials

2.1.1 The SILTSACK shall be manufactured from a woven polypropylene and sewn by a double needle machine, using a high strength nylon thread.

2.1.2 The SILTSACK seams shall have a certified average wide width strength per ASTM D-4884 standards as follows:

SILTSACK STYLE	Test Method	Test Method
Regular Flow	ASTM D-4884	165.0 lbs./in
Hi-Flow	ASTM D-4884	114.6 lbs./in

2.1.3 The SILTSACK will be manufactured to fit the opening of the catch basin of drop inlet. The SILTSACK will have the following features: two dump straps attached at the bottom to facilitate the emptying of the SILTSACK; the SILTSACK shall have lifting loops as an integral part of the system to be used to lift the SILTSACK from the basin; the SILTSACK shall have a restraint cord approximately halfway up the sack to

Keep the sides away from the catch basin walls, this yellow cord is also a visual means of indicating when the sack should be emptied. Once the strap is covered with sediment, the SILTSACK should be emptied, cleaned, and placed back into the basin.

2.1.4 The geotextile fabric shall be a woven polypropylene fabric with the following properties:

SILTSACK Regular Flow

Property	Test Method	Test Result
Grab Tensile	ASTM D-4632	300 lbs.
Grab Elongation	ASTM D-4632	20%
Puncture	ASTM D-4833	120 lbs.
Mullen Burst	ASTM D-3786	800 P.S.I
trapezoid Tear	ASTM D-4533	120 lbs.
UV Resistance	ASTM D-4355	80%
Apparent Opening	ASTM D-4751	40 US Sieve
Flow Rate	ASTM D-4491	40 Gal/Min/Ft2
Permittivity	ASTM D-4491	0.55 sec-1

OR

SILTSACK Hi-Flow

Property	Test Method	Test Result
Grab Tensile	ASTM D-4632	265 lbs.
Grab Elongation	ASTM D-4632	20%
Puncture	ASTM D-4833	135 lbs.
Mullen Burst	ASTM D-3786	420 P.S.I.
trapezoid Tear	ASTM D-4533	45 lbs.
UV Resistance	ASTM D-4355	90%
Apparent Opening	ASTM D-4751	20 US Sieve
Flow Rate	ASTM D-4491	200 Gal/Min/Ft2
Permittivity	ASTM D-4491	1.5 sec-1

* All properties are minimum average roll values

3.0 Construction Sequence

3.1.1 To install the SILTSACK in a catch basin, remove the grate and place the sack in the opening. Hold out approximately six inches of the sack outside the frame. This is the area of the lifting straps. Replace the grate to hold the sack in place.

3.1.2 The SILTSACK is considered full and should be emptied when the restraint cord is no longer visible.

3.1.3 To remove the SILTSACK, take two pieces of 1" diameter rebar and place through the lifting loops on each side of the sack to facilitate the lifting of the SILTSACK.

3.1.4 To empty the SILTSACK, place it where the contents will be collected. Place the rebar through the lifting straps (connected to the bottom of the sack) and lift. This will turn the SILTSACK inside out and empty the contents. Clean out with a shovel and rinse. Return the SILTSACK to its original shape and place back in the basin.

3.1.5 The SILTSACK is reusable. Once the construction cycle is complete, remove the SILTSACK from the basin and clean. The SILTSACK should be stored out of the sunlight until needed on another project.

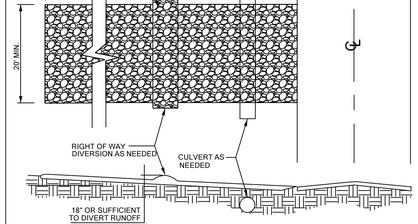

TEMPORARY STABILIZED CONSTRUCTION ENTRANCE 3
N.T.S

NOTES

1. STONE SIZE - NO. 2 STONE SHALL BE USED, OR RECYCLED CONCRETE EQUIVALENT.
2. THE CONSTRUCTION ENTRANCE SHALL COINCIDE WITH THE PROPOSED DRIVE AS SHOWN ON THE PLAN.
3. PAVEMENT THICKNESS - STONE LAYER SHALL BE 6" THICK FOR STANDARD DUTY ACTIVITY AND 10" THICK FOR HEAVY DUTY ACTIVITY.
4. DRIVEWAY WIDTH - THE ENTRANCE SHALL BE AT LEAST 20' WIDE. CONTRACTOR SHALL ENSURE ALL VEHICLES UTILIXE THE CONSTRUCTION ENTRANCE UNTIL PAVEMENT IS IN PLACE.
5. BEDDING-A GEOTEXTILE SHALL BE PLACED OVER THE ENTIRE AREA PRIOR TO PLACING STONE. IT SHALL HAVE A GRAB TENSILE STRENGTH OF AT LEAST 200 LBS. AND A MULLEN BURST STRENGTH OF AT LEAST 190 LBS.
6. CULVERT-A PIPE OR CULVERT SHALL BE CONSTRUCTED UNDER THE ENTRANCE IF NEEDED TO PERVENT SURFACE WATER FLOWING ACROSS THE ENTRANCE FROM BEING DIRECTED OUT ONTO PAVED SURFACES.
7. WATER BAR - A WATER BAR SHALL BE CONSTRUCTED AS PART OF THE CONSTRUCTION ENTRANCE IF NEEDED TO PERVENT SURFACE RUNOFF FROM FLOWING THE LENGTH OF THE CONSTRUCTION ENTRANCE AND OUT ONTO PAVED SURFACES.
8. MAINTENANCE - TOP DRESSING OF ADDITIONAL STONE SHALL BE APPLIED AS CONDITIONS DEMAND. MUD SPILLED, DROPPED, WASHED OR TRACKED ONTO PUBLIC ROADS, OR ANY SURFACE WHERE RUNOFF IS NOT CHECKED BY SEDIMENT CONTROLS, SHALL BE REMOVED IMMEDIATELY. REMOVAL SHALL BE ACCOMPLISHED BY SCRAPING OR SWEEPING.
9. CONSTRUCTION ENTRANCES SHALL NOT BE RELIED UPON TO REMOVE MUD FROM VEHICLES AND PREVENT OFF SITE TRACKING. VEHICLES THAT ENTER AND LEAVE THE CONSTRUCTION SHALL BE RESTRICTED FROM MUDDY AREAS.

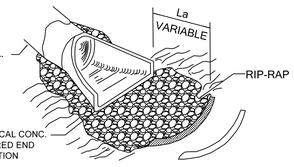

PIPE DIA.	AVERAGE ROCK DIA.
15"	8"
18"	8"
24"	10"
30"	12"
36"	14"
42"	16"

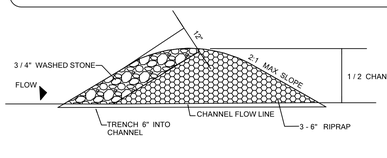

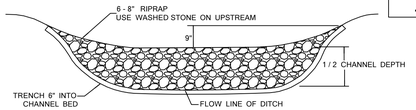

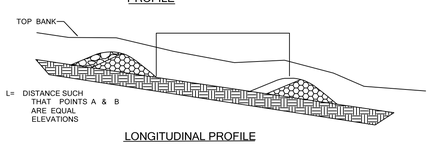

NOTES:

1. THE MAXIMUM HEIGHT OF THE CHECK DAM AT THE CENTER SHALL NOT EXCEED ONE HALF THE DEPTH OF THE CHANNEL.
2. MAXIMUM SPACING SHALL BE SO THE TOE OF THE UPSTREAM DAM IS THE SAME ELEVATION AS THE TOP OF THE DOWNSTREAM DAM.
3. REMOVE SEDIMENT WHEN 33%THE HEIGHT OF THE WEIR.
4. REMOVE CHECK DAMS WHEN SITE STABILIZATION IS ACHIEVED.

CHECK DAM SPACING CRITERIA

SPILLWAY HEIGHT	CHANNEL SLOPE	CHECK DAM SPACING
1.5	1%	150 FT.
2.0	1%	200 FT.
1.5	2%	75 FT.
2.0	2%	100 FT.
1.5	3%	50 FT.
2.0	3%	67 FT.
1.5	4%	38 FT.
2.0	4%	50 FT.
1.5	5%	30 FT.
2.0	5%	40 FT.

*ASSUME CHANNEL DEPTH IS 2 TIMES SPILLWAY HEIGHT

DITCH ROCK CHECK 7
N.T.S.

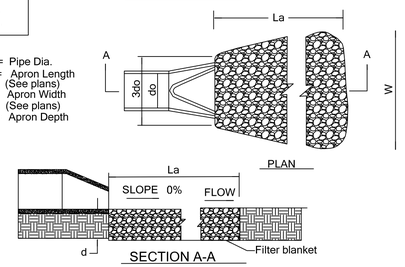

NOTES:

SEE APPROPRIATE SCHEDULE FOR DIMENSIONS
1. La is the length of the riprap apron.
2. d = 1.5 times the maximum stone diameter but not less than 6".
3. A filter blanket or filter fabric should be installed between the rip-rap and soil foundation

OUTLET PROTECTION 6
N.T.S.

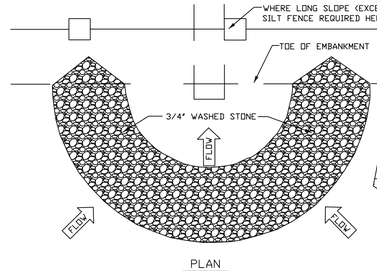

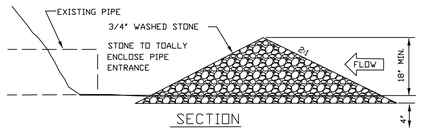

PIPE INLET PROTECTION 8
N.T.S.

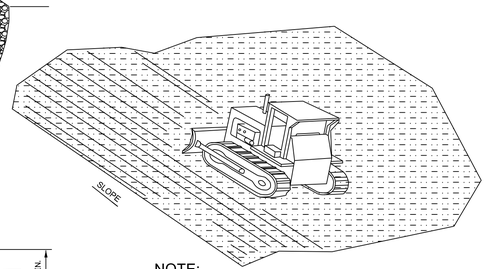

NOTE:

USE DOZER TRACKS TO CREATE GROOVES PERPENDICULAR TO THE SLOPE. GROOVES WILL CATCH SEED, FERTILIZER, MULCH, RAINFALL AND DECREASE SEDIMENT IN RUNOFF.

DOZER TRACKING DETAIL 9
NOT TO SCALE

PREVIOUSLY APPROVED

ESC DETAILS

RMJE
CIVIL | GEOTECHNICAL | SURVEYING | MATERIAL TESTING
PO BOX 2
TOMPKINSVILLE, KY 42167
3213 SUMMIT SQUARE PLACE
SUITE 100
LEXINGTON, KY 40509
PO BOX 444
HINDMAN, KY 41822

2023-1 HILLSIDE CENTER
7180 NOLENSVILLE ROAD, NOLENSVILLE, TN 37135

EROSION SEDIMENT CONTROL DETAILS

REVISIONS

SCALE:	AS SHOWN
JOB No.:	23-01-054
DESIGNED BY:	JBS
DETAILED BY:	SRH
CHECKED BY:	
DATE:	03-04-2025

STEPHEN R. HARRIS
REGISTERED ENGINEER
NO. 119437
STATE OF TENNESSEE

PE | RMJE
COPYRIGHT @ 2025

C2.1

SITE IMPROVEMENT NOTES

1. BASE INFORMATION WAS TAKEN FROM A TOPOGRAPHIC AND BOUNDARY SURVEY

2. THE CONTRACTOR SHALL CHECK ALL EXISTING CONDITIONS (i.e. INVERTS, UTILITY ROUTINGS, UTILITY CROSSINGS, AND DIMENSIONS) IN THE FIELD PRIOR TO COMMENCEMENT OF UTILITY WORK. REPORT ANY DISCREPANCIES TO THE OWNER'S REPRESENTATIVE.

3. THE CONTRACTOR SHALL VERIFY THE EXACT LOCATION OF ALL EXISTING UTILITIES, AND SHALL TAKE CARE TO PROTECT UTILITIES THAT ARE TO REMAIN. REPAIR ANY DAMAGE ACCORDING TO LOCAL STANDARDS AND AT THE CONTRACTOR'S EXPENSE. COORDINATE ALL CONSTRUCTION WITH THE APPROPRIATE UTILITY COMPANY.

4. THE CONTRACTOR SHALL CONFORM TO ALL LOCAL CODES AND RECEIVE APPROVAL WHERE NECESSARY BEFORE CONSTRUCTION.

5. EXISTING PAVEMENT OF PUBLIC ROADWAYS SHALL BE PATCHED IN ACCORDANCE WITH LOCAL AGENCY STANDARDS WHEREVER UTILITY INSTALLATION REQUIRES REMOVAL OF THE EXISTING PAVEMENT. COORDINATE PAVEMENT TRENCHING LOCATIONS WITH SITE CIVIL, PLUMBING AND ELECTRICAL PLANS.

6. PROVIDE A SMOOTH TRANSITION BETWEEN EXISTING PAVEMENT AND NEW PAVEMENT. SLIGHT FIELD ADJUSTMENT OF FINAL GRADES MAY BE NECESSARY. ALL CURB TERMINATIONS ARE TO BE TAPERED TO GRADE. ANY WORK UNACCEPTABLE TO THE OWNER'S REPRESENTATIVE OR TO THE LOCAL GOVERNING AUTHORITY SHALL BE REPAIRED OR REPLACED BY THE CONTRACTOR AT NO ADDITIONAL EXPENSE TO THE OWNER.

7. ALL SIDEWALKS & HANDICAP RAMPS SHALL BE BUILT TO ADA STANDARDS.

8. CONTRACTOR SHALL PAVE IN THE DIRECTION OF TRAFFIC.

9. THE CONTRACTOR WILL BE REQUIRED TO ADJUST GRADES OF INTERSECTING STREETS, ALLEYS, PUBLIC ENTRANCES AND PRIVATE DRIVES AS DIRECTED BY THE ENGINEER.

10. ALL ROADWAY AND SIDEWALK CONSTRUCTION SHALL CONFORM TO THE REQUIREMENTS AND SPECIFICATIONS OF LOCAL AND/OR STATE GOVERNING AGENCY.

11. ALL CONSTRUCTION MATERIALS AND INSTALLATION SHALL CONFORM TO THE LOCAL AND/OR GOVERNING AGENCY REGULATIONS AND SPECIFICATIONS.

12. ALL PAVEMENT MATERIALS AND CONSTRUCTION SHALL CONFORM TO THE LOCAL AND/OR GOVERNING AGENCY. REGULATIONS AND SPECIFICATIONS.

13. ALL PAINTED TEXT SHALL BE PER CURRENT MUTCD REQUIREMENTS.

14. THE CONTRACTOR SHALL INSTALL NECESSARY TRAFFIC CONTROL SAFETY BARRICADES, LIGHTING, AND OTHER REQUIRED CONTROL MEASURES SECURING THE WORK AREA FROM EXISTING TRAFFIC TO ASSURE PUBLIC SAFETY.

15. THE CONTRACTOR IS RESPONSIBLE FOR FULLY MAINTAINING THE SITE UNTIL THE WORK IS ACCEPTED IN TOTAL BY THE OWNER.

16. ANY DEFICIENCIES WITHIN THE SITE PRIOR TO TOTAL ACCEPTANCE BY THE OWNER MUST BE REPLACED IN KIND PER STANDARD DRAWINGS AND SPECIFICATIONS.

17. PROVIDE 1/2" EXPANSION JOINT. MATERIAL W / SEALANT WHERE NEW CONCRETE CURBS OR PAVING ABUT SEWER STRUCTURES, BUILDINGS, ETC

18. CONCRETE JOINTS SAWCUT OR TOOLED AS PER OWNER/CONTRACTOR.

N 88°55'18" E 998.68'

S 87°41'19" W 309.97'

WITHIN NEW DEVELOPMENTS AND FOR OFF-SITE LINES CONSTRUCTED AS A RESULT OF, OR TO PROVIDE SERVICE TO, THE NEW DEVELOPMENT, ALL UTILITIES, SUCH AS CABLE TELEVISION, ELECTRICAL (EXCLUDING TRANSFORMERS), GAS, SEWER, TELEPHONE, AND WATER LINES SHALL BE PLACED UNDERGROUND. OFFICE/INDUSTRIAL (OI) DISTRICTS SHALL BE PERMITTED TO HAVE THEIR OFF-SITE FEEDER LINES OVERHEAD.

LIGHT DUTY PAVEMENT
HEAVY DUTY PAVEMENT
77 PARKING STALLS
24.0'
9'x18' TYPICAL
OPEN SPACE
BUILDING #4 PHASE II
BUILDING #5 PHASE II
BUILDING #6 PHASE II
EX. PHASE I HILLSIDE CENTER

KEYNOTES

KEY	DESCRIPTION	DETAIL
1	ASPHALT PAVEMENT	1 / C6.0
2	CONCRETE PAVEMENT	2 / C6.0
3	SIDEWALK RAMP	12 / C6.0
4	CONCRETE SIDEWALK	4 / C7.0
5	GARBAGE ENCLOSURE	3 / C6.0
6	PARKING LOT STRIPPING	6 / C6.0
7	DIRECTION ARROW	4 / C6.0
8	ADA SYMBOL	5 / C6.0
9	TAPERED END CURB	9 / C7.0
10	STOP BAR	8 / C6.0
11	TYPE 10 DROP INLET	2 / C7.0
12	TACTILE WARNING STRIP	5 / C7.0
13	TYPE 1 CONCRETE CURB WITH GUTTER	7 / C7.0
14	CROSS WALK STRIPPING	9 / C6.0
15	LANDSCAPE AREA	

PREVIOUSLY APPROVED

SITE PLAN

0' 20' 40' 60'

RMJE
CIVIL | GEOTECHNICAL | SURVEYING | MATERIAL TESTING
PO BOX 444
HINDMAN, KY 41822
PO BOX 2
TOMPKINSVILLE, KY 42167
3213 SUMMIT SQUARE PLACE
SUITE 100
LEXINGTON, KY 40509

2023-1 HILLSIDE CENTER
7180 NOLENSVILLE ROAD, NOLENSVILLE, TN 37135

SITE PLAN

STEPHEN R. HARRIS
REGISTERED ENGINEER
STATE OF TENNESSEE

REVISIONS

SCALE: AS SHOWN
JOB No.: 23-01-054
DESIGNED BY:
DETAILED BY: JBS
CHECKED BY: RMJ
DATE: 03-04-2025
PE | RMJE
COPYRIGHT © 2025

C3.0

GENERAL GRADING NOTES

1. CONTRACTOR IS RESPONSIBLE FOR APPLYING FOR AND OBTAINING A LOCAL GRADING PERMIT.
2. SITE PREPARATION WILL REQUIRE REMOVAL OF ALL VEGETATION, SURFACE ORGANIC SOILS, AND ANY OTHER SURFACE DELETERIOUS MATERIALS.
3. CONSTRUCT SILT BARRIERS BEFORE BEGINNING GRADING OPERATIONS.
4. PROVIDE TEMPORARY CONSTRUCTION ACCESS AT THE POINT WHERE CONSTRUCTION VEHICLES ENTER AND EXIT THE CONSTRUCTION AREA. MAINTAIN PUBLIC ROADWAYS FREE OF TRACKED MUD AND DIRT.
5. THE CONTRACTOR SHALL CHECK ALL EXISTING GRADES AND DIMENSIONS IN THE FIELD PRIOR TO BEGINNING WORK AND REPORT ANY DISCREPANCIES TO THE ENGINEER.
6. THE CONTRACTOR SHALL COMPLY WITH ALL PERTINENT PROVISIONS OF THE MANUAL OF ACCIDENT PREVENTION AND CONSTRUCTION ISSUED BY THE AGC OF AMERICA, INC. AND THE SAFETY AND HEALTH REGULATIONS OF CONSTRUCTION ISSUED BY THE U.S. DEPARTMENT OF LABOR.
7. PROPOSED CONTOUR LINES AND SPOT ELEVATIONS ARE THE RESULT OF AN ENGINEERED GRADING DESIGN AND REFLECT A PLANNED INTENT WITH REGARD TO DRAINAGE AND MOVEMENT OF MATERIALS. SHOULD THE CONTRACTOR HAVE ANY QUESTIONS OF THE INTENT OR ANY PROBLEM WITH THE CONTINUITY OF GRADES, THE ENGINEER SHALL BE CONTACTED IMMEDIATELY.
8. MINIMUM GRADE ON ASPHALT OR CONCRETE PAVING SHALL BE 1.0% UNLESS OTHERWISE INDICATED ON THE PLANS.
9. CONTRACTOR SHALL CONFORM TO ALL APPLICABLE CODES AND OBTAIN APPROVAL AS NECESSARY BEFORE BEGINNING CONSTRUCTION.
10. ALL EARTHWORK, INCLUDING THE EXCAVATED SUBGRADE AND EACH LAYER OF FILL, SHALL BE MONITORED AND APPROVED BY A QUALIFIED GEOTECHNICAL ENGINEER, OR HIS REPRESENTATIVE. IF QUESTIONABLE MATERIALS ARE ENCOUNTERED, IT SHOULD BE EVALUATED BY THE GEOTECHNICAL ENGINEER TO DETERMINE IF REMOVAL AND REPLACEMENT WITH STRUCTURAL COMPACTED FILL IS NECESSARY. DISPOSAL OF UNSUITABLE MATERIAL SHALL BE IN ACCORDANCE WITH LOCAL, STATE AND FEDERAL REGULATIONS FOR THE MATERIAL.
11. IF ANY SPRINGS OR UNDERGROUND STREAMS ARE EXPOSED DURING CONSTRUCTION, PERMANENT FRENCH DRAINS MAY BE REQUIRED. THE DRAINS SHALL BE SPECIFIED AND LOCATED DURING CONSTRUCTION AS REQUIRED BY THE CONDITIONS WHICH ARE ENCOUNTERED, AND SHALL BE APPROVED BY THE ENGINEER.
12. THIS GRADING & DRAINAGE PLAN IS NOT A DETERMINATION OR GUARANTEE OF THE SUITABILITY OF THE SUBSURFACE CONDITIONS FOR THE WORK INDICATED.
13. CONTRACTOR SHALL CONFORM TO THE RECOMMENDATIONS OF THE GEOTECHNICAL ENGINEERING EXPLORATION AND ANALYSIS UNLESS OTHERWISE DIRECTED BY ENGINEER.
14. CONTRACTOR SHALL TAKE SPECIAL CARE TO COMPACT FILL SUFFICIENTLY AROUND AND OVER ALL PIPES, STRUCTURES, VALVE STEMS, ETC. INSIDE THE PROPOSED PAVED AREAS TO AVOID SETTLEMENT. ANY SETTLEMENT DURING THE WARRANTY PERIOD SHALL BE RESTORED BY THE CONTRACTOR.
15. IN NO CASE SHALL SLOPE, HEIGHT, SLOPE INCLINATION, OR EXCAVATION DEPTH, INCLUDING TRENCH CONSTRUCTION, EXCEED THOSE SPECIFIED IN LOCAL, STATE AND FEDERAL REGULATIONS. SPECIFICALLY, THE CURRENT OSHA HEALTH AND SAFETY STANDARDS FOR EXCAVATIONS (29 CRF PART 1926) SHALL BE FOLLOWED.
16. DO NOT DISTURB VEGETATION OR REMOVE TREES EXCEPT WHEN NECESSARY FOR GRADING PURPOSES.
17. STRIP TOPSOIL FROM ALL CUT AND FILL AREAS AND STOCKPILE AS DIRECTED BY THE OWNER. UPON COMPLETION OF GENERAL GRADING DISTRIBUTE TOPSOIL OVER ALL DISTURBED AREAS, TO A MINIMUM DEPTH OF 6". CONTRACTOR SHALL SUPPLY ADDITIONAL TOP SOIL IF INSUFFICIENT QUANTITIES EXIST ON SITE.
18. POSITIVE DRAINAGE SHALL BE ESTABLISHED AS THE FIRST ORDER OF WORK AND SHALL BE MAINTAINED AT ALL TIMES DURING AND AFTER CONSTRUCTION. SOIL SOFTENED BY WATER IN FOUNDATION AND PAVEMENT AREAS MUST BE UNDERCUT AND REPLACED WITH SUITABLE FILL MATERIALS APPROVED BY THE GEOTECHNICAL ENGINEER. GROUNDWATER INFILTRATION INTO EXCAVATIONS SHOULD BE EXPECTED, AND THE WATER SHALL BE REMOVED USING GRAVITY DRAINAGE OR PUMPING.
19. ALL FILL MATERIAL IN THE BUILDING ENVELOPES SHALL BE APPROVED BY THE GEOTECHNICAL ENGINEER PRIOR TO PLACEMENT. THIS MATERIAL SHALL BE PLACED IN LIFTS DIRECTED BY THE GEOTECHNICAL ENGINEER AND COMPACTED TO 98% STANDARD PROCTOR.
20. ANY SITE USED FOR DISPOSAL AND/OR STOCKPILE OF ANY MATERIAL SHALL BE PROPERLY PERMITTED FOR SUCH ACTIVITY. IT IS THE RESPONSIBILITY OF THE CONTRACTOR TO SEE THAT ALL REQUIRED PERMITS ARE SECURED FOR EACH PROPERTY UTILIZED. A COPY OF THE APPROVED PERMIT MUST BE PROVIDED TO THE INSPECTOR PRIOR TO COMMENCEMENT OF WORK ON ANY PROPERTY. FAILURE TO DO SO MAY RESULT IN THE CONTRACTOR REMOVING ANY ILLEGALLY PLACED MATERIAL AT HIS OWN EXPENSE.
21. CONTRACTOR TO RESTRICT CONSTRUCTION TRAFFIC TO SPECIFIC DRIVE AREAS AND TEMPORARY COARSE AGGREGATE CONSTRUCTION ROADS IN UNPAVED AREAS TO REDUCE DISTURBANCE OF THE SUBGRADE PARTICULARLY DURING WET WEATHER CONDITIONS.

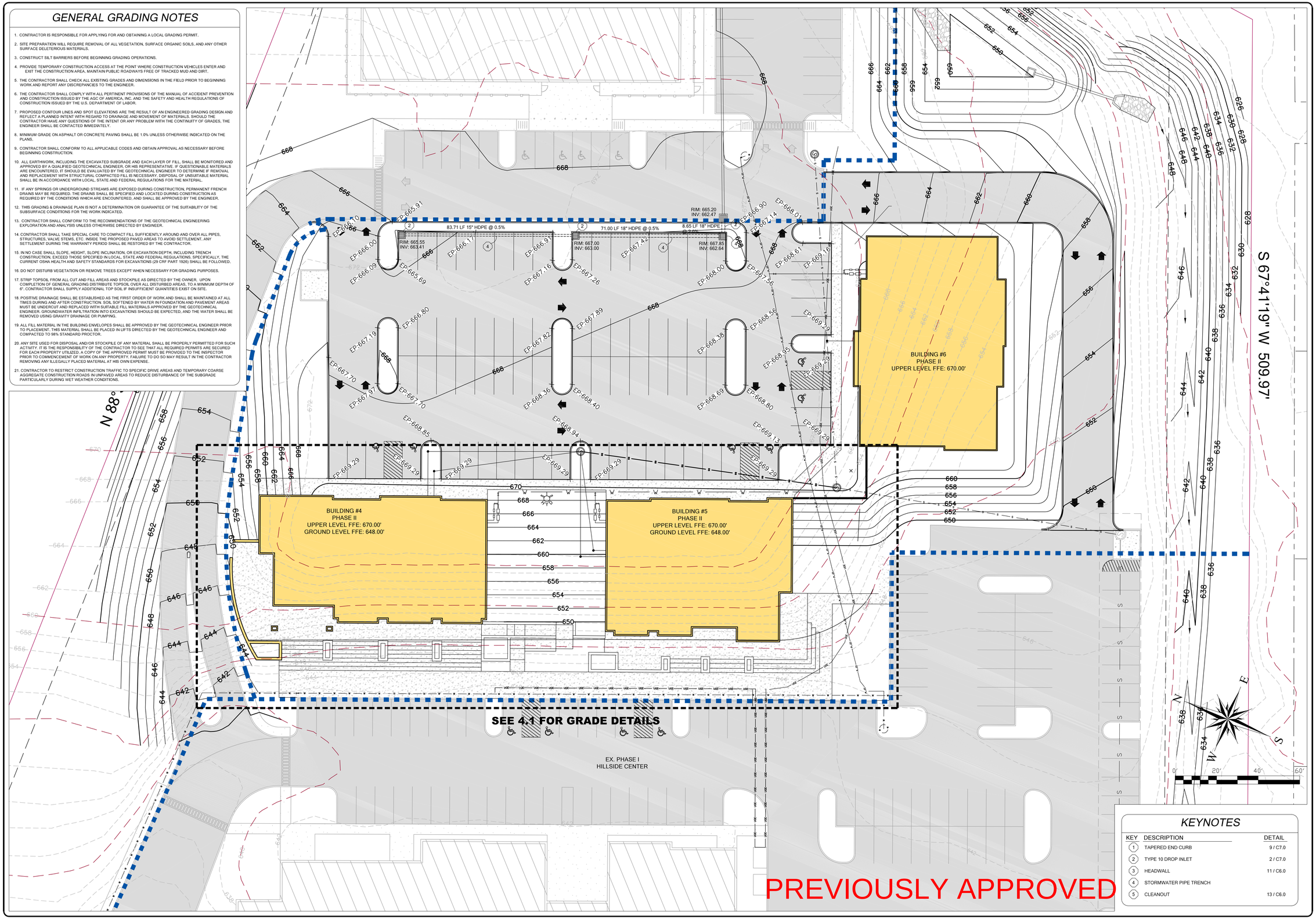

KEYNOTES

KEY	DESCRIPTION	DETAIL
1	TAPERED END CURB	9 / C7.0
2	TYPE 10 DROP INLET	2 / C7.0
3	HEADWALL	11 / C6.0
4	STORMWATER PIPE TRENCH	
5	CLEANOUT	13 / C6.0

GRADE PLAN

RMJE
CIVIL | GEOTECHNICAL | SURVEYING | MATERIAL TESTING
PO BOX 444
HINDMAN, KY 41822
PO BOX 2
TOMPKINSVILLE, KY 42167
3213 SUMMIT SQUARE PLACE
SUITE 100
LEXINGTON, KY 40509

2023-1 HILLSIDE CENTER

7180 NOLENSVILLE ROAD, NOLENSVILLE, TN 37135

GRADE PLAN

STEPHEN R. HARRIS
REGISTERED ENGINEER
PROFESSIONAL ENGINEER
STATE OF TENNESSEE

REVISIONS

SCALE:	AS SHOWN
JOB No.:	23-01-054
DESIGNED BY:	JBS
DETAILED BY:	RMJ
CHECKED BY:	
DATE:	03-04-2025

PE | RMJE COPYRIGHT © 2025

C4.0

GENERAL GRADING NOTES

1. CONTRACTOR IS RESPONSIBLE FOR APPLYING FOR AND OBTAINING A LOCAL GRADING PERMIT.
2. SITE PREPARATION WILL REQUIRE REMOVAL OF ALL VEGETATION, SURFACE ORGANIC SOILS, AND ANY OTHER SURFACE DELETERIOUS MATERIALS.
3. CONSTRUCT SILT BARRIERS BEFORE BEGINNING GRADING OPERATIONS.
4. PROVIDE TEMPORARY CONSTRUCTION ACCESS AT THE POINT WHERE CONSTRUCTION VEHICLES ENTER AND EXIT THE CONSTRUCTION AREA. MAINTAIN PUBLIC ROADWAYS FREE OF TRACKED MUD AND DIRT.
5. THE CONTRACTOR SHALL CHECK ALL EXISTING GRADES AND DIMENSIONS IN THE FIELD PRIOR TO BEGINNING WORK AND REPORT ANY DISCREPANCIES TO THE ENGINEER.
6. THE CONTRACTOR SHALL COMPLY WITH ALL PERTINENT PROVISIONS OF THE MANUAL OF ACCIDENT PREVENTION AND CONSTRUCTION ISSUED BY THE AGC OF AMERICA, INC. AND THE SAFETY AND HEALTH REGULATIONS OF CONSTRUCTION ISSUED BY THE U.S. DEPARTMENT OF LABOR.
7. PROPOSED CONTOUR LINES AND SPOT ELEVATIONS ARE THE RESULT OF AN ENGINEERED GRADING DESIGN AND REFLECT A PLANNED INTENT WITH REGARD TO DRAINAGE AND MOVEMENT OF MATERIALS. SHOULD THE CONTRACTOR HAVE ANY QUESTIONS OF THE INTENT OR ANY PROBLEM WITH THE CONTINUITY OF GRADES, THE ENGINEER SHALL BE CONTACTED IMMEDIATELY.
8. MINIMUM GRADE ON ASPHALT OR CONCRETE PAVING SHALL BE 1.0% UNLESS OTHERWISE INDICATED ON THE PLANS.
9. CONTRACTOR SHALL CONFORM TO ALL APPLICABLE CODES AND OBTAIN APPROVAL AS NECESSARY BEFORE BEGINNING CONSTRUCTION.
10. ALL EARTHWORK, INCLUDING THE EXCAVATED SUBGRADE AND EACH LAYER OF FILL, SHALL BE MONITORED AND APPROVED BY A QUALIFIED GEOTECHNICAL ENGINEER, OR HIS REPRESENTATIVE. IF QUESTIONABLE MATERIALS ARE ENCOUNTERED, IT SHOULD BE EVALUATED BY THE GEOTECHNICAL ENGINEER TO DETERMINE IF REMOVAL AND REPLACEMENT WITH STRUCTURAL COMPACTED FILL IS NECESSARY. DISPOSAL OF UNSUITABLE MATERIAL SHALL BE IN ACCORDANCE WITH LOCAL, STATE AND FEDERAL REGULATIONS FOR THE MATERIAL.
11. IF ANY SPRINGS OR UNDERGROUND STREAMS ARE EXPOSED DURING CONSTRUCTION, PERMANENT FRENCH DRAINS MAY BE REQUIRED. THE DRAINS SHALL BE SPECIFIED AND LOCATED DURING CONSTRUCTION AS REQUIRED BY THE CONDITIONS WHICH ARE ENCOUNTERED, AND SHALL BE APPROVED BY THE ENGINEER.
12. THIS GRADING & DRAINAGE PLAN IS NOT A DETERMINATION OR GUARANTEE OF THE SUITABILITY OF THE SUBSURFACE CONDITIONS FOR THE WORK INDICATED.
13. CONTRACTOR SHALL CONFORM TO THE RECOMMENDATIONS OF THE GEOTECHNICAL ENGINEERING EXPLORATION AND ANALYSIS UNLESS OTHERWISE DIRECTED BY ENGINEER.
14. CONTRACTOR SHALL TAKE SPECIAL CARE TO COMPACT FILL SUFFICIENTLY AROUND AND OVER ALL PIPES, STRUCTURES, VALVE STEMS, ETC. INSIDE THE PROPOSED PAVED AREAS TO AVOID SETTLEMENT. ANY SETTLEMENT DURING THE WARRANTY PERIOD SHALL BE RESTORED BY THE CONTRACTOR.
15. IN NO CASE SHALL SLOPE, HEIGHT, SLOPE INCLINATION, OR EXCAVATION DEPTH, INCLUDING TRENCH CONSTRUCTION, EXCEED THOSE SPECIFIED IN LOCAL, STATE AND FEDERAL REGULATIONS. SPECIFICALLY, THE CURRENT OSHA HEALTH AND SAFETY STANDARDS FOR EXCAVATIONS (29 CRF PART 1926) SHALL BE FOLLOWED.
16. DO NOT DISTURB VEGETATION OR REMOVE TREES EXCEPT WHEN NECESSARY FOR GRADING PURPOSES.
17. STRIP TOPSOIL FROM ALL CUT AND FILL AREAS AND STOCKPILE AS DIRECTED BY THE OWNER. UPON COMPLETION OF GENERAL GRADING DISTRIBUTE TOPSOIL OVER ALL DISTURBED AREAS, TO A MINIMUM DEPTH OF 6". CONTRACTOR SHALL SUPPLY ADDITIONAL TOP SOIL IF INSUFFICIENT QUANTITIES EXIST ON SITE.
18. POSITIVE DRAINAGE SHALL BE ESTABLISHED AS THE FIRST ORDER OF WORK AND SHALL BE MAINTAINED AT ALL TIMES DURING AND AFTER CONSTRUCTION. SOIL SOFTENED BY WATER IN FOUNDATION AND PAVEMENT AREAS MUST BE UNDERCUT AND REPLACED WITH SUITABLE FILL MATERIALS APPROVED BY THE GEOTECHNICAL ENGINEER. GROUNDWATER INFILTRATION INTO EXCAVATIONS SHOULD BE EXPECTED, AND THE WATER SHALL BE REMOVED USING GRAVITY DRAINAGE OR PUMPING.
19. ALL FILL MATERIAL IN THE BUILDING ENVELOPES SHALL BE APPROVED BY THE GEOTECHNICAL ENGINEER PRIOR TO PLACEMENT. THIS MATERIAL SHALL BE PLACED IN LIFTS DIRECTED BY THE GEOTECHNICAL ENGINEER AND COMPACTED TO 98% STANDARD PROCTOR.
20. ANY SITE USED FOR DISPOSAL AND/OR STOCKPILE OF ANY MATERIAL SHALL BE PROPERLY PERMITTED FOR SUCH ACTIVITY. IT IS THE RESPONSIBILITY OF THE CONTRACTOR TO SEE THAT ALL REQUIRED PERMITS ARE SECURED FOR EACH PROPERTY UTILIZED. A COPY OF THE APPROVED PERMIT MUST BE PROVIDED TO THE INSPECTOR PRIOR TO COMMENCEMENT OF WORK ON ANY PROPERTY. FAILURE TO DO SO MAY RESULT IN THE CONTRACTOR REMOVING ANY ILLEGALLY PLACED MATERIAL AT HIS OWN EXPENSE.
21. CONTRACTOR TO RESTRICT CONSTRUCTION TRAFFIC TO SPECIFIC DRIVE AREAS AND TEMPORARY COARSE AGGREGATE CONSTRUCTION ROADS IN UNPAVED AREAS TO REDUCE DISTURBANCE OF THE SUBGRADE PARTICULARLY DURING WET WEATHER CONDITIONS.

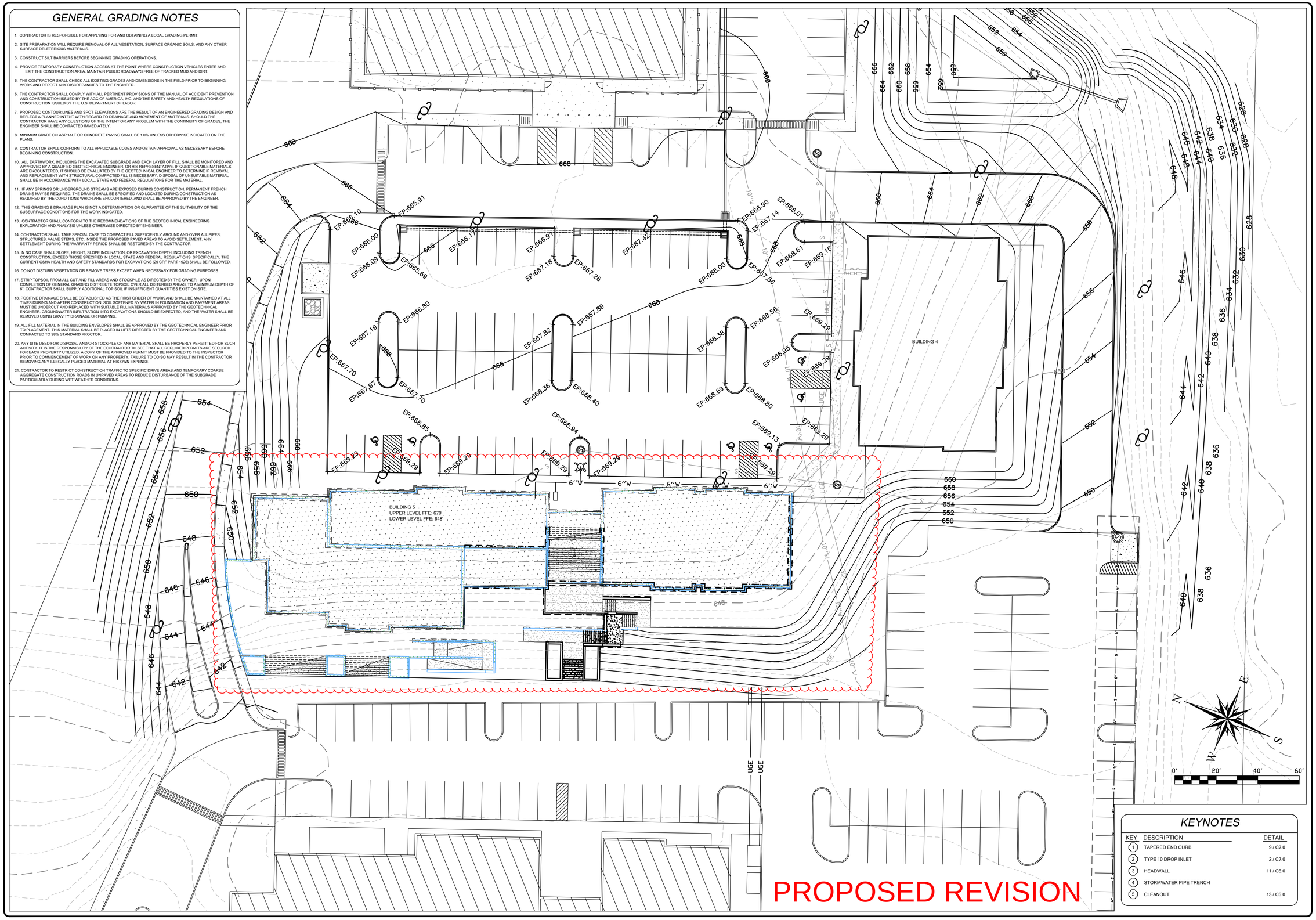

KEYNOTES

KEY	DESCRIPTION	DETAIL
1	TAPERED END CURB	9 / C7.0
2	TYPE 10 DROP INLET	2 / C7.0
3	HEADWALL	11 / C6.0
4	STORMWATER PIPE TRENCH	
5	CLEANOUT	13 / C6.0

PROPOSED REVISION

GRADE PLAN

RMJE
CIVIL | GEOTECHNICAL | SURVEYING | MATERIAL TESTING
3213 SUMMIT SQUARE PLACE SUITE 100 LEXINGTON, KY 40509
PO BOX 2 TOMPKINSVILLE, KY 42167
PO BOX 444 HINDMAN, KY 41822

2023-1 HILLSIDE CENTER

7180 NOLENSVILLE ROAD, NOLENSVILLE, TN 37135

GRADE PLAN

STEPHEN R. HARRIS
REGISTERED ENGINEER
PROFESSIONAL ENGINEER
STATE OF TENNESSEE

REVISIONS

SCALE:	AS SHOWN
JOB No.:	23-051
DESIGNED BY:	
DETAILED BY:	JBS
CHECKED BY:	RMJ
DATE:	9-14-2026

PE | RMJE COPYRIGHT © 2026

C4.0

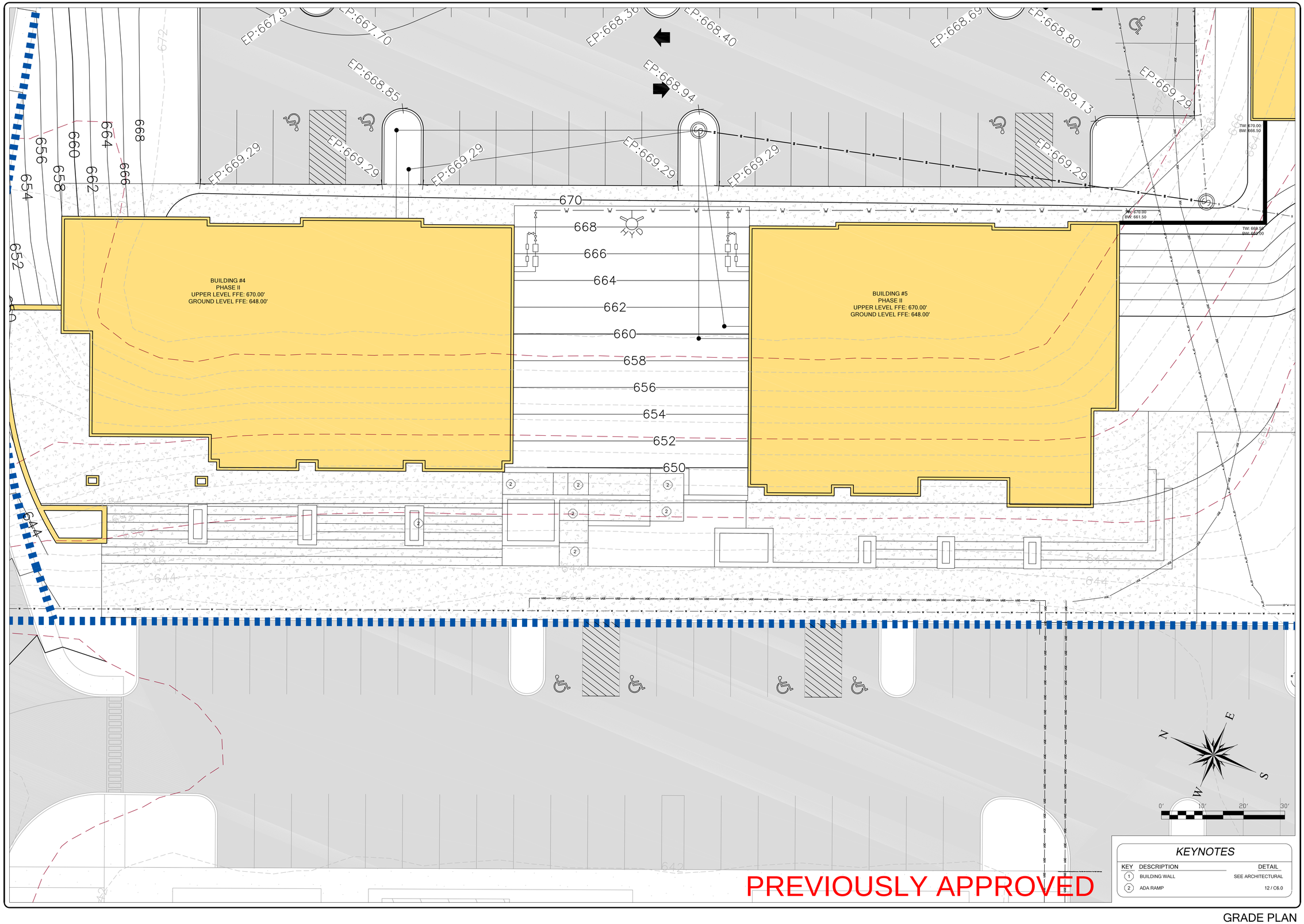

PREVIOUSLY APPROVED

KEYNOTES

KEY	DESCRIPTION	DETAIL
1	BUILDING WALL	SEE ARCHITECTURAL
2	ADA RAMP	12 / C6.0

GRADE PLAN

RMJE
CIVIL | GEOTECHNICAL | SURVEYING | MATERIAL TESTING
PO BOX 444
HINDMAN, KY 41822
3213 SUMMIT SQUARE PLACE
SUITE 100
LEXINGTON, KY 40509
PO BOX 2
TOMPKINSVILLE, KY 42167

2023-1 HILLSIDE CENTER
7180 NOLENSVILLE ROAD, NOLENSVILLE, TN 37135

GRADE PLAN

STEPHEN R. HARRIS
REGISTERED ENGINEER
NO. 114421
STATE OF TENNESSEE

REVISIONS

SCALE: AS SHOWN
JOB No.: 23-01-054
DESIGNED BY:
DETAILED BY: JBS
CHECKED BY: RMJ
DATE: 03-04-2025

PE | RMJE
COPYRIGHT © 2025

C4.1

UTILITY NOTES

1. THE CONTRACTOR IS RESPONSIBLE FOR LOCATING ALL CHARTED AND UNCHARTED UTILITIES. TAKE CARE TO PROTECT UTILITIES THAT ARE TO REMAIN. REPAIR ANY DAMAGE ACCORDING TO LOCAL STANDARDS AND AT THE CONTRACTOR'S EXPENSE. COORDINATE ALL CONSTRUCTION WITH THE APPROPRIATE UTILITY COMPANY.
2. THE LOCATION OF EXISTING UTILITIES SHOWN ON THESE PLANS ARE APPROXIMATE ONLY. THE CONTRACTOR SHALL NOTIFY EACH INDIVIDUAL UTILITY OWNER OF HIS PLAN OF OPERATION IN THE AREA OF THE UTILITIES, PRIOR TO COMMENCING WORK. THE CONTRACTOR SHALL CONTACT THE UTILITY OWNERS AND REQUEST THEM TO PROPERLY LOCATE THEIR RESPECTIVE UTILITY ON THE GROUND. THIS NOTIFICATION SHALL BE GIVEN AT LEAST THREE (3) BUSINESS DAYS PRIOR TO COMMENCEMENT OF OPERATIONS AROUND THE UTILITY.
3. THE CONTRACTOR SHALL PROVIDE ALL HORIZONTAL AND VERTICAL BENDS TO ATTAIN THE ALIGNMENT INDICATED ON THE PLANS. PROVIDE VERTICAL BENDS WHERE NECESSARY TO ALLOW WATER LINES TO PASS UNDER OR OVER OTHER UTILITY LINES. (ALL BENDS AND BRACES NEEDED MAY NOT BE ACTUALLY SHOWN). PROVIDE BRACING AND/OR RODDING AT ALL BENDS AND TEES AS REQUIRED BY LOCAL UTILITY DEPARTMENT.
4. REDUCE PRESSURE BACKFLOW PREVENTER (RPBP) OR DUAL CHECK MAY BE REQUIRED ON ALL TESTS AND FILL LINES (JUMPER) NEEDED FOR WATER LINE CONSTRUCTION.
5. COORDINATE THE EXACT LOCATION OF ALL UTILITIES ENTERING THE BUILDING WITH THE PLUMBING, ELECTRICAL, AND MECHANICAL PLANS.
6. WHERE DRAINAGE OR UTILITY LINES OCCUR IN NEW FILL AREAS 100% OF THE FILL MATERIAL IS TO BE PLACED AND COMPACTED TO 95 MAXIMUM DRY DENSITY ACCORDING TO ASTM (D-698) PRIOR TO INSTALLATION OF DRAINAGE OR UTILITY LINES. FILL IS TO BE INSPECTED BY A PROFESSIONAL GEOTECHNICAL ENGINEER TESTING FIRM EMPLOYED BY THE OWNER. RESULTS OF THE TEST SHALL BE FURNISHED TO THE OWNER'S REPRESENTATIVE. CONTRACTOR TO PAY FOR ANY RETESTING.
7. PRIOR TO SUBMITTING THE BID, THE CONTRACTOR WILL BE SOLELY RESPONSIBLE FOR CONTACTING OWNERS OF ALL AFFECTED UTILITIES IN ORDER TO DETERMINE THE EXTENT TO WHICH UTILITY RELOCATIONS AND/OR ADJUSTMENTS WILL BE NECESSARY AND WHAT EFFECT THOSE ADJUSTMENTS MAY HAVE UPON THE SCHEDULE OF WORK FOR THE PROJECT. CONTRACTOR SHALL ALSO BE SOLELY RESPONSIBLE FOR VERIFYING CONNECTION LOCATION AND COSTS FOR ANY ADDITIONAL APPURTENANCES REQUIRED TO PROVIDE UTILITY SERVICES TO THE SITE PRIOR TO BIDDING. WHILE SOME WORK MAY BE REQUIRED AROUND UTILITY FACILITIES THAT WILL REMAIN IN PLACE, OTHER UTILITY FACILITIES MAY NEED TO BE ADJUSTED CONCURRENTLY WITH THE CONTRACTOR'S OPERATIONS.
8. THE CONCRETE CAPS AND ENCASEMENTS ON WATER AND SEWER LINES SHALL BE A MINIMUM OF 6" THICK. USE 3000 PSI CONCRETE.
9. CONTRACTOR SHALL MARK THE LOCATION OF ALL NEW PVC LINES WITH #8 WIRE.
10. BACKFLOW PREVENTION DEVICE FOR THE DOMESTIC WATER SERVICE SHALL BE LOCATED INSIDE THE BUILDING UNLESS OTHERWISE NOTES, SEE PLUMBING PLANS.
11. THE FIRE LINE SHALL BE INSTALLED BY A SPRINKLER CONTRACTOR LICENSED IN THE STATE OF TENNESSEE.
12. THE CONTRACTOR SHALL FIELD VERIFY THE EXACT HORIZONTAL AND VERTICAL LOCATION OF EXISTING MANHOLES OR SANITARY SEWER LINES AT THE POINT OF CONNECTION PRIOR TO ORDERING MATERIALS OR BEGINNING CONSTRUCTION. ANY DISCREPANCIES SHALL BE REPORTED TO THE ENGINEER IMMEDIATELY.
13. THE CONTRACTOR SHALL BE RESPONSIBLE FOR COORDINATING THE SEQUENCING OF CONSTRUCTION FOR ALL UTILITY LINES SO THAT WATER LINES DO NOT CONFLICT WITH SANITARY SEWERS, SANITARY SEWER SERVICES, STORM SEWERS, OR ANY OTHER UTILITY OR STRUCTURE, EXISTING OR NEW.
14. BEFORE CONNECTIONS ARE MADE INTO EXISTING UTILITIES, THE NEW LINES ARE TO BE FLUSHED AND TESTED BY THAT CONTRACTOR IN ACCORDANCE WITH THE PRESIDING LOCAL UTILITY DEPARTMENT AND/OR STATE/FEDERAL SPECIFICATION.
15. ALL TRENCHES CUT IN EXISTING ROADS OR DRIVES SHALL UTILIZE A CLEAN SAW CUT AND SHALL BE BACKFIELD WITH #57 STONE. REPAIR ROADS PER LOCAL REQUIREMENTS.
16. THE CONTRACTOR SHALL BE FINANCIALLY RESPONSIBLE FOR THE REPAIR/REPLACEMENT TO ALL DAMAGE TO ANY EXISTING FEATURES (i.e. DRIVES, ROADS, YARDS, LANDSCAPING, ETC.) TO PRE-CONSTRUCTION CONDITION.
17. THE GENERAL CONTRACTOR AND THE ELECTRICAL CONTRACTOR SHALL CONTACT THE UTILITY COMPANIES AND PROVIDE ALL LABOR AND MATERIALS WHICH ARE NOT PROVIDED BY THE RESPECTIVE COMPANIES IN ORDER TO SUPPLY SERVICE TO THE BUILDING.
18. ELECTRICAL WORK WILL BE DONE BY LICENSED ELECTRICIAN.
19. THE CONTRACTOR SHALL MAINTAIN 10 FEET HORIZONTAL SEPARATION BETWEEN SANITARY SEWER LINES AND WATER LINES. WHERE THESE CRITERIA CANNOT BE MET, THE CONTRACTOR SHALL MAINTAIN 18" VERTICAL SEPARATION BETWEEN WATER AND SEWER LINES. THE CONTRACTOR SHALL FIELD VERIFY THE EXACT HORIZONTAL AND VERTICAL LOCATION OF EXISTING MANHOLES OR SANITARY SEWER LINES AT THE POINT OF CONNECTION PRIOR TO ORDERING MATERIALS OR BEGINNING CONSTRUCTION. ANY DISCREPANCIES SHALL BE REPORTED TO THE ENGINEER IMMEDIATELY.
20. THE CONTRACTOR SHALL COMPLY WITH ALL PERTINENT PROVISIONS OF THE MANUAL OF ACCIDENT PREVENTION PROVISIONS OF THE MANUAL OF ACCIDENT PREVENTION AND CONSTRUCTION ISSUED BY AGC OF AMERICA.
21. SEWER WORK TO BE DONE BY CITY LICENSED PLUMBER AND GENERAL CONTRACTOR. PLUMBING CONTRACTOR AND GENERAL CONTRACTOR SHALL MAKE THE CONNECTION & EXTEND LATERAL TO THE BUILDING. GENERAL CONTRACTOR AND PLUMBING CONTRACTOR SHALL COORDINATE THE CONNECTION TO LINE WITH THE LOCAL GOVERNING AUTHORITY. THE GENERAL CONTRACTOR AND PLUMBING CONTRACTOR WILL BE RESPONSIBLE FOR SETTING CLEANOUTS TO GRADE AND PROVIDING A NEENAH OR EQUAL TRAFFIC RATED COVER WHEN REQUIRED. COSTS FOR ALL WORK INCLUDING TAP FEES AND TESTING SHALL BE INCLUDED IN THE GENERAL CONTRACTOR'S BID. TAP SHALL BE MADE INITIALLY IN THE NAME OF THE GENERAL CONTRACTOR AND TRANSFERRED AT PROJECT COMPLETION.

WITHIN NEW DEVELOPMENTS AND FOR OFF-SITE LINES CONSTRUCTED AS A RESULT OF, OR TO PROVIDE SERVICE TO, THE NEW DEVELOPMENT, ALL UTILITIES, SUCH AS CABLE TELEVISION, ELECTRICAL (EXCLUDING TRANSFORMERS), GAS, SEWER, TELEPHONE, AND WATER LINES SHALL BE PLACED UNDERGROUND. OFFICE/INDUSTRIAL (OI) DISTRICTS SHALL BE PERMITTED TO HAVE THEIR OFF-SITE FEEDER LINES OVERHEAD.

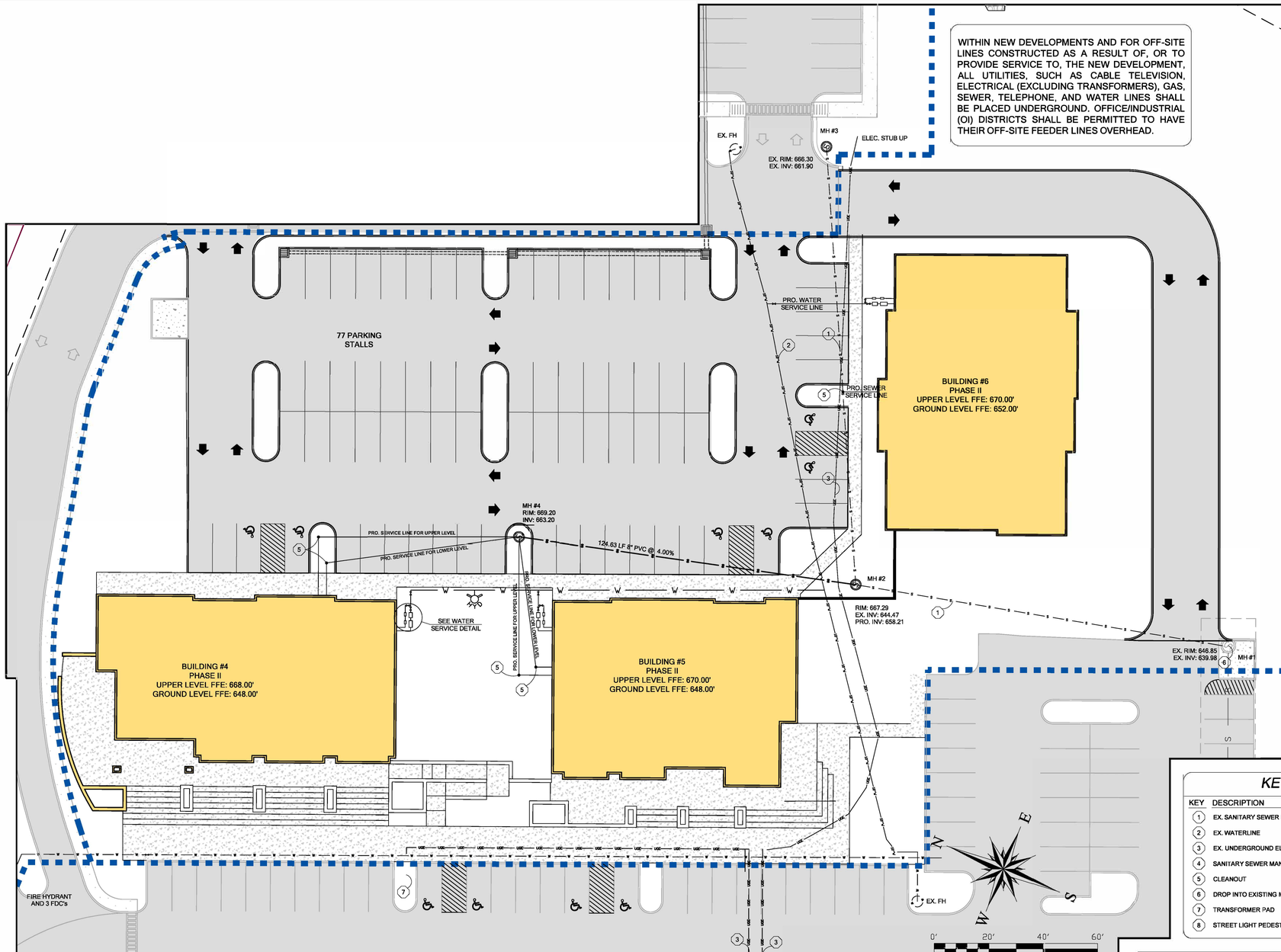

KEYNOTES

KEY	DESCRIPTION	DETAIL
1	EX. SANITARY SEWER PIPE	1 / C5.1
2	EX. WATERLINE	2 / C5.1
3	EX. UNDERGROUND ELECTRIC/COMMUNICATIONS	5 / C5.1
4	SANITARY SEWER MANHOLE	9 / C5.1
5	CLEANOUT	6 / C5.1
6	DROP INTO EXISTING MANHOLE	4 / C5.1
7	TRANSFORMER PAD	3 / C5.1
8	STREET LIGHT PEDESTAL	8 / C5.1

WATER SERVICE DETAIL

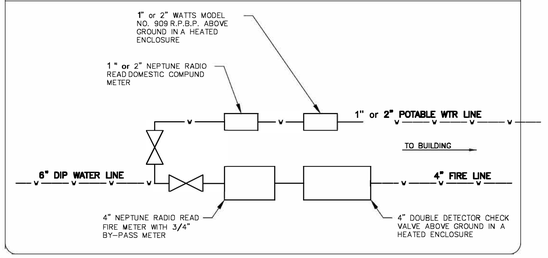

WATERLINE NOTES

1. ALL WATERLINE PIPE SHALL BE CLASS 200 PVC (ASTM D-2241).
2. WHERE A GATVE VALVE IS SHOWN AT THE BRANCH OF A TEE IS SHALL BE RODDED AT THE TEE.
3. INSTALL M.J. BENDS AS REQUIRED TO LIMIT THE RADIUS OF WATERLINE CURVATURE TO MANUFACTURER'S REQUIREMENTS.
4. ALL TIES TO EXISTING WATERLINES SHALL BE PERFORMED BY LOCAL WATER COMPANY PERSONNEL AT THE CONTRACTOR'S EXPENSE. MATERIALS WILL BE FURNISHED BY THE CONTRACTOR.
5. WATER SERVICES ARE SHOWN FOR REFERENCES ONLY AND MUST BE VERIFIED BY LOCAL WATER COMPANY. A 2" OR LARGER (VERIFY WITH LOCAL WATER COMPANY) PVC SLEEVE SHALL BE INSTALLED AT 2' OR BEYOND R/W.
6. WATER SERVICE INSTALLATION SHALL BE BY LOCAL WATER COMPANY PERSONNEL.
7. WHERE WATER LINE CROSSES ROAD, STONE BACKFILL REQUIRED TO FULL DEPTH.
8. ALL GRADE AND DRAIN WORK TO BE COMPLETED PRIOR TO WATER LINE INSTALLATION.
9. ENCASEMENT OF WATER LINE REQUIRED IF SEPARATION BETWEEN SANITARY SEWER AND WATER LINE IS LESS THAN 18 INCHES.
10. THERE MUST BE A MINIMUM OF 5' SEPARATION BETWEEN WATER SERVICES AND GAS CROSSINGS.

SANITARY SEWER NOTES

1. ALL SANITARY SEWER SERVICES CONNECTED TO MANHOLES SHALL BE LOW AIR TESTED AT THE MANHOLE.
2. ALL MANHOLE FRAMES AND COVERS SHALL BE JOHN BOUCHARD, NO. 1230 UNLESS OTHERWISE NOTED.
3. ALL SANITARY SEWER PIPE SHALL BE PVC 1120, MEETING ASTM SPEC D 3034, TYPE PSM, SDR 35.
4. ALL SERVICE CONNECTIONS SHALL BE 8" SDR 35 PVC PIPE. THE SERVICE SHALL EXTEND 10' ONTO EACH LOT. THE OPEN ENDS SHALL BE SEALED WITH A STANDARD PLUG AND MARKED WITH A #4 BAR WHICH EXTENDS A MINIMUM OF 4' ABOVE THE FINAL GRADE.
5. WHERE SEWER LINES CROSS WATER MAINS, ENCASEMENT OR OTHER PROTECTION FOR THE WATER MAIN SHALL BE PROVIDED UNLESS THE OUTSIDE OF THE WATER MAIN IS A MINIMUM OF 18 INCHES ABOVE THE OUTSIDE OF THE SEWER. PROTECTION SHALL BE CONTINUOUS INTEL THE WATER LINE IS AT LEAST 10 FEET FROM THE SEWER AS MEASURED PERPENDICULAR TO THE SEWER LINE. IN THE CASE OF EXISTING WATERLINE, THE PROTECTION MAY BE PROVIDED BY SLEEVING OR ENCASING THE SEWER FOR A DISTANCE AT LEAST 10' ON EACH SIDE OF THE WATER LINE AS MEASURED PERPENDICULAR TO THE WATER LINE. WHERE THE WATER LINE CROSSES UNDER A SEWER LINE, ADEQUATE STRUCTURAL SUPPORT SHALL BE PROVIDED FOR THE SEWER TO MAINTAIN THE PHYSICAL INTEGRITY OF THE SEWER AT THE CROSSING POINT.
6. SEWERS SHALL BE LAID AT LEAST 10 FEET HORIZONTALLY FROM ANY EXISTING OR PROPOSED WATER MAIN. THE DISTANCE SHALL BE MEASURED EDGE TO EDGE.
7. CONTRACTOR IS TO PLACE A 3M LOCATING DISK WITH EACH SERVICE.

PREVIOUSLY APPROVED

UTILITY PLAN

RMJE
CIVIL | GEOTECHNICAL | SURVEYING | MATERIAL TESTING
3213 SUMMIT SQUARE PLACE SUITE 100 LEXINGTON, KY 40509
PO BOX 2 TOMPKINSVILLE, KY 42167
PO BOX 444 HINDMAN, KY 41822

2023-1 HILLSIDE CENTER
7180 NOLENSVILLE ROAD, NOLENSVILLE, TN 37135

UTILITY PLAN

STEPHEN R. HARRIS
REGISTERED P.E.
STATE OF TENNESSEE

REVISIONS

SCALE: AS SHOWN
JOB No.: 23-01-054
DESIGNED BY: JBS
DETAILED BY: RWJ
CHECKED BY:
DATE: 03-04-2025

PE | RMJE 2025
COPYRIGHT @ 2025

C5.0

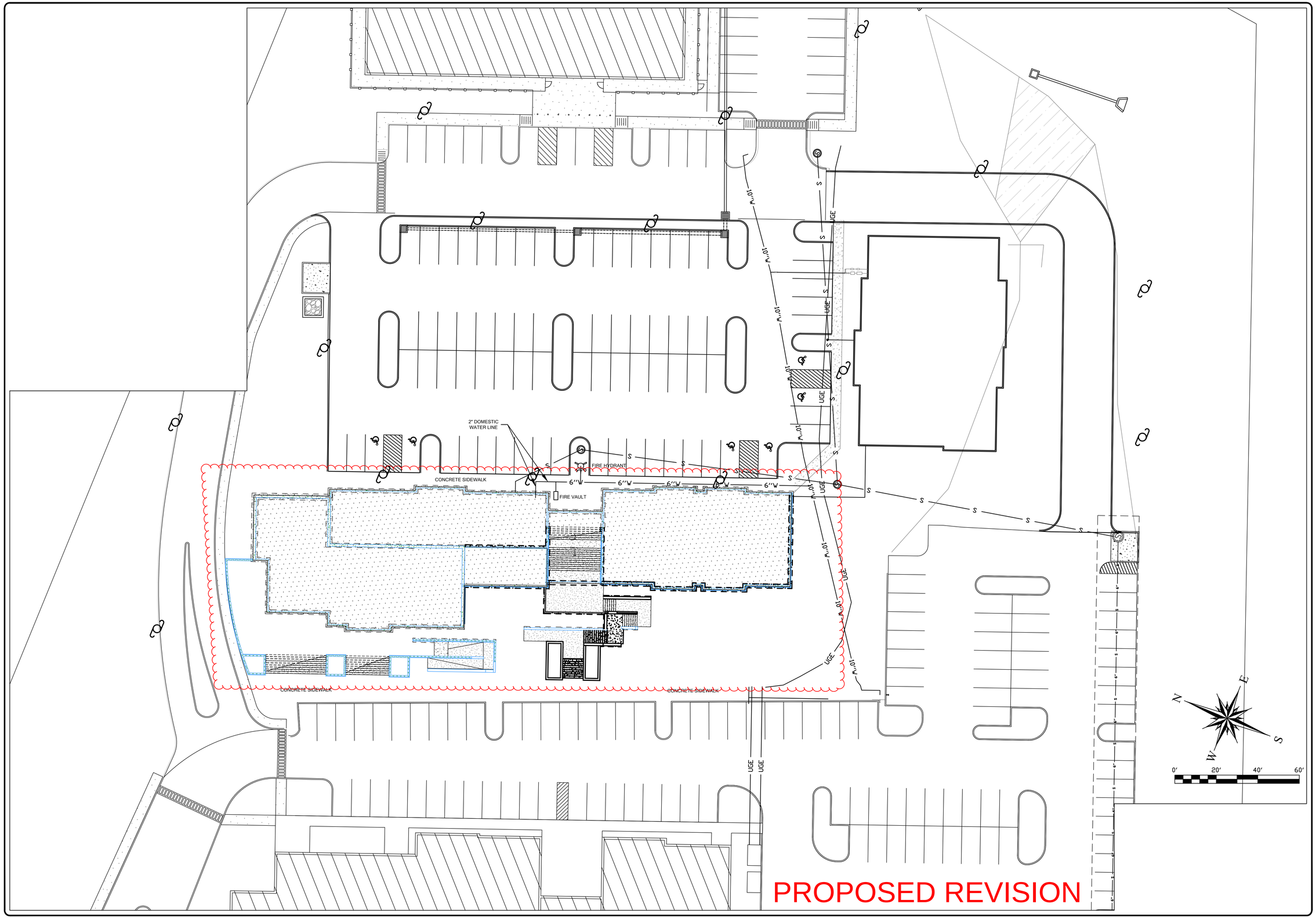

UTILITY PLAN

RMJE
CIVIL | GEOTECHNICAL | SURVEYING | MATERIAL TESTING
PO BOX 444
HINDMAN, KY 41822
3213 SUMMIT SQUARE PLACE
SUITE 100
LEXINGTON, KY 40509
PO BOX 2
TOMPKINSVILLE, KY 42167

2023-1 HILLSIDE CENTER
7180 NOLENSVILLE ROAD, NOLENSVILLE, TN 37135

UTILITY PLAN

STEPHEN R. HARRIS
REGISTERED ENGINEER
STATE OF TENNESSEE

REVISIONS			

SCALE:	AS SHOWN
JOB No.:	23-051
DESIGNED BY:	JBS
DETAILED BY:	
CHECKED BY:	RMJ
DATE:	9-14-2026

PE | RMJE
COPYRIGHT © 2026

C5.0

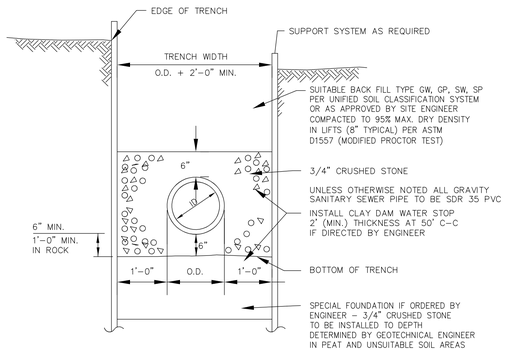

SANITARY SEWER TRENCH SECTION (1)

NOT TO SCALE

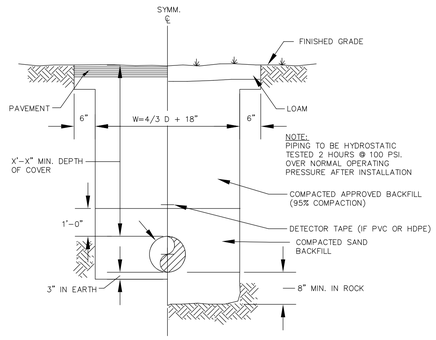

NOTE:
FIRE LINE PIPING AND SERVICE PIPING > 3" I.D. TO BE CLASS 53 DUCTILE IRON WITH RESTRAINED JOINTS 40 FT. EACH SIDE OF ALL FITTINGS, ELBOWS AND APPURTENANCES. DOMESTIC PIPING < 3" I.D. TO BE TYPE K COPPER PER ASTM B 88.

WATER LINE TRENCH SECTION (2)

NOT TO SCALE

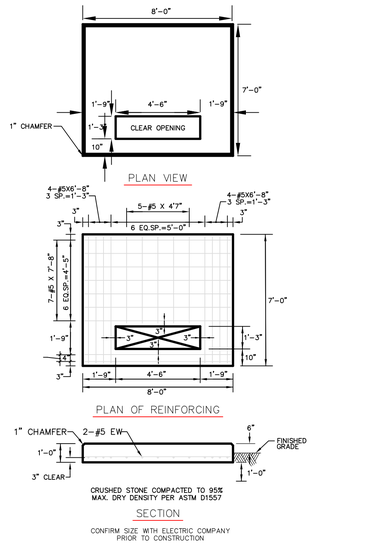

CONFIRM SIZE WITH ELECTRIC COMPANY PRIOR TO CONSTRUCTION

TRANSFORMER PAD (3)

NOT TO SCALE

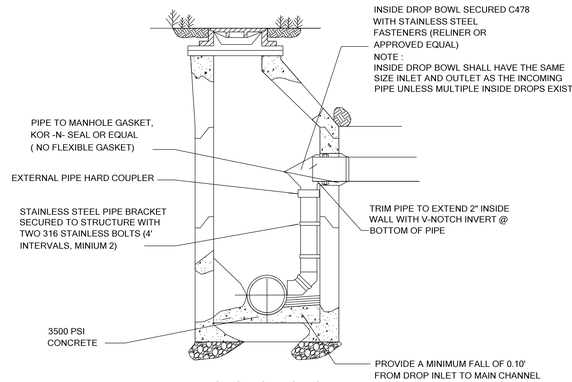

SECTION C - C

(FOR CONNECTION TO EXISTING MANHOLES ONLY)

DROP IN EXISTING MANHOLE (4)

NOT TO SCALE

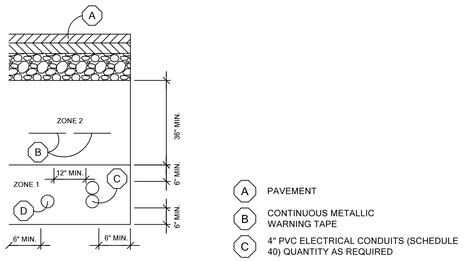

A PAVEMENT
B CONTINUOUS METALLIC WARNING TAPE
C 4" PVC ELECTRICAL CONDUITS (SCHEDULE 40) QUANTITY AS REQUIRED
D 4" PVC TELEPHONE CONDUITS (SCHEDULE 40) QUANTITY AS REQUIRED

ZONE 1 - CLEAN SAND
ZONE 2 - NO. 9 STONE

UNDERGROUND ELECTRICAL AND COMMUNICATIONS (5)

NOT TO SCALE

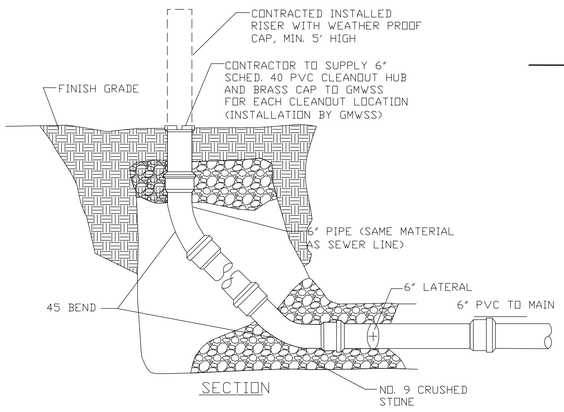

CLEANOUT (6)

NOT TO SCALE

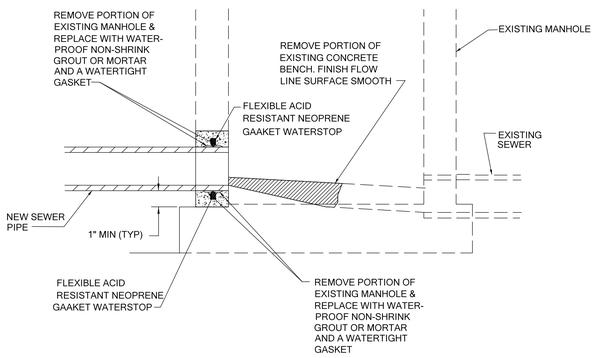

ALL HOLES CUT INTO SEWER MANHOLE SHALL BE CORE DRILLED.

SEWER CONNECTION TO EXISTING MANHOLE (7)

NOT TO SCALE

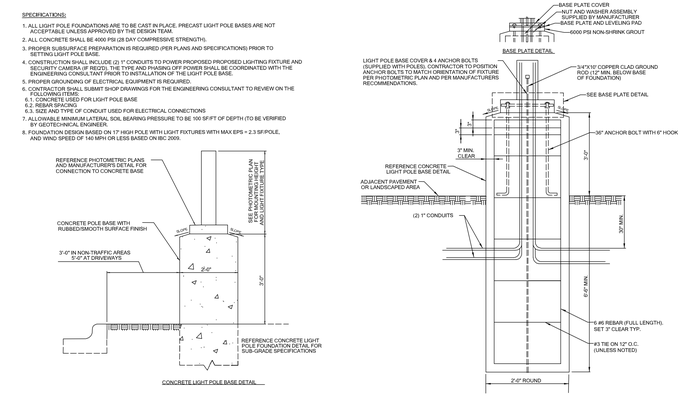

STREET LIGHT (8)

NOT TO SCALE

SECTION A - A

MANHOLE (9)

NOT TO SCALE

PREVIOUSLY APPROVED

DETAILS

RMJE
CIVIL | GEOTECHNICAL | SURVEYING | MATERIAL TESTING
PO BOX 2
TOMPKINSVILLE, KY 42167
3213 SUMMIT SQUARE PLACE
SUITE 100
LEXINGTON, KY 40509
PO BOX 444
HINDMAN, KY 41822

2023-1 HILLSIDE CENTER
7180 NOLENSVILLE ROAD, NOLENSVILLE, TN 37135

DETAILS

STEPHEN R. HARRIS
REGISTERED ENGINEER
PE 036444
STATE OF TENNESSEE

REVISIONS

SCALE: AS SHOWN
JOB No.: 23-01-054
DESIGNED BY: JBS
DETAILED BY: JBS
CHECKED BY: SRH
DATE: 03-04-2025
PE | RMJE
COPYRIGHT © 2025

C5.1